Thorpe Mill Ltd
Pressure Care

The foot board for a metal frame bed is easy to fit into place.

- Pass the webbing through the wedge
- Position wedge in prime location on mattress
- Release Velcro fastening from position A and pass webbing down the side of the mattress and round the non movable part of the bed frame and present Velcro's back to position A to form a loop round the bed frame.
- On the opposite side of the bed, release buckle and pass the webbing down the side of the mattress and round the non movable part of the bed frame and push buckles back together to form a loop round the bed frame.
- Pull on loose end to secure in place.

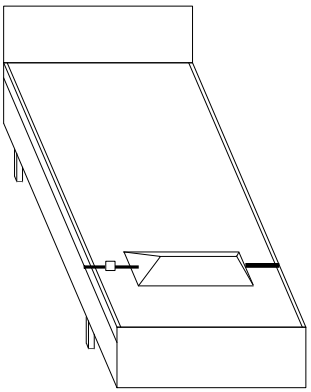



Thorpe Mill Ltd
Pressure Care

The foot board for a metal frame bed is easy to fit into place.

- Pass the webbing through the wedge
- Position wedge in prime location on mattress
- Release Velcro fastening from position A and pass webbing down the side of the mattress and round the non movable part of the bed frame and present Velcro's back to position A to form a loop round the bed frame.
- On the opposite side of the bed, release buckle and pass the webbing down the side of the mattress and round the non movable part of the bed frame and push buckles back together to form a loop round the bed frame.
- Pull on loose end to secure in place.

