FR-W04

The smallest travel power chair in the world

USERS INSTRUCTION MANUAL

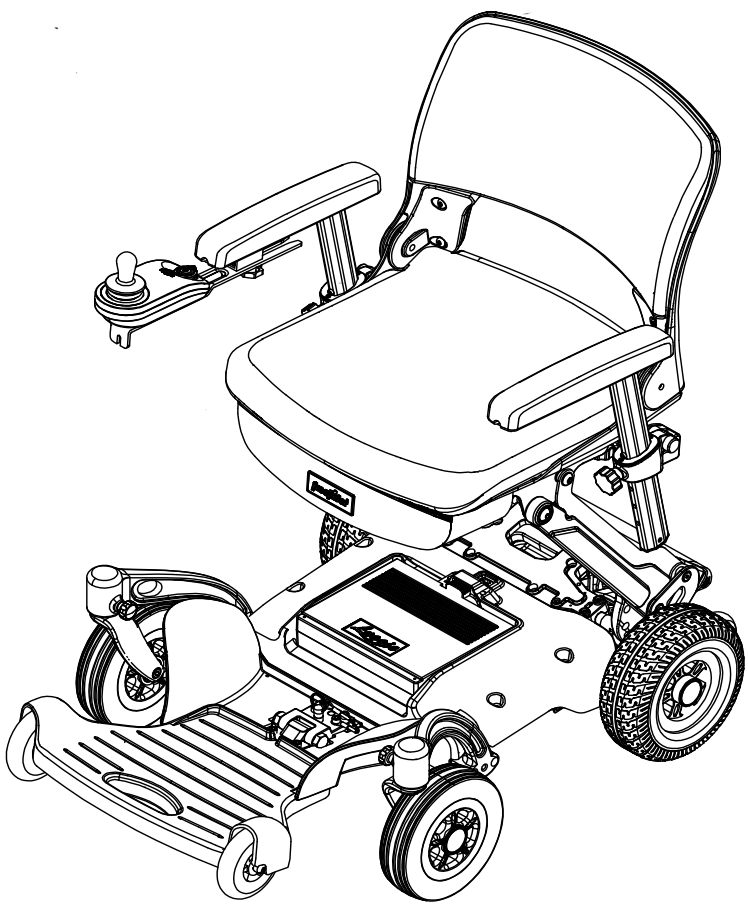



OPERATION



COMFORT



MAINTENANCE

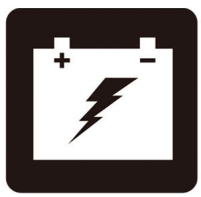

BATTERY CHARGING

SAFETY GUIDELINES

Warning! **An authorized Provider or qualified technician must perform the initial setup of this wheelchair and must perform all of the procedures in this manual.**

The symbols below are used throughout this owner's manual and on the wheelchair to identify warnings and important information. It is very important for you to read them and understand them completely.

Warning! **Indicates a potentially hazardous condition/situation. Failure to follow designated procedures can cause either personal injury, component damage, or malfunction.**

Caution! **Means if the precaution is not taken, it may cause minor or moderate injury. Advise to pay close attention in order to minimize risk and damage.**

These actions are prohibited. These actions should not be performed at any time or in any circumstances. Performing a prohibited action can cause personal injury and/or equipment damage.

INTENDED USE

The intended use of the FR-W04 device is to provide mobility to persons limited to a seated position that have the capability of operating a wheelchair.

Please fill out the following information for quick reference:

Provider: _____

Address: _____

Phone Number: _____ ***Purchase Date:*** _____

Note: This manual contains the latest specifications and product information, we reserve the right to necessary changes, any change in the product may cause a slight change in the illustration or description the latest version of the user manual is available on our website.

Note: Your wheelchair has been tested to the following standards with reference to EN12184. Emissions EN55022(B), Immunity IEC61000-4-2,IEC61000-4-3,IEC 60601-1/ AAMI/ANSI ES 60601-1

Contact Information

If you have any questions, comments, and ordering any accessories and parts, about the service you received from your authorized dealer, or please feel free to contact manufacturers at the address below:

FREERIDER
No.22, Bengong 5th Rd., Gangshan Dist.,
Kaoshiung City 820, Taiwan(R.O.C.)
Tel : 886-7-6223093
Fax : 886-7-6230373
Email: sales@freerider.com.tw
http://www.freerider.com.tw

CONTENTS

I. INTRODUCTION 4
II. PRODUCT DESCRIPTION 4
III. ABOUT YOUR FR-W04 5
IV. FR-W04 FEATURE GUIDE 6
V. INSTALL YOUR FR-W04 16
VI. SAFETY WARNINGS & INSTRUCTION LABELS 19
VII. TRANSPORTING YOUR FR-W04 33
VIII. BATTERY AND BATTERY CHARGING 35
IX. FREQUENTLY ASKED QUESTIONS 37
X. CARE AND MAINTENANCE 39
XI. BASIC FAULT FINDING 45
XII. TECHNICAL SPECIFICATION 46
XIII. OPTIONAL ACCESSORIES 50
XIV. WARRANTY TERMS 51
XV. SERVICE RECORD 53

I. INTRODUCTION

Congratulations on the purchase of your FR-W04! Please read this User's Instruction Manual carefully before you attempt to operate your wheelchair. Your User's Instruction Manual is your guide to safe operation and maintenance of your wheelchair.

Before beginning to use your wheelchair, make sure you completely read and understand all instructions thoroughly. Please observe the "Guidelines For Safe Use" and the "Safety Instructions and warnings" outlined in this manual. If you have any questions concerning operation or maintenance, consult your authorized dealer.

Please keep in mind that the operator of the wheelchair is responsible for accidents or hazards to other people and/or their properties.

Your wheelchair has numerous features not found on other power wheelchairs. With proper care and maintenance, you will enjoy many years of dependable service from your wheelchair. Your wheelchair needs to receive proper maintenance at regular intervals and should be inspected frequently for proper mechanical operation. Troubleshooting guidelines, methods of detecting improper operation and how to make minor adjustments are included in this manual.

Follow all recommendations to obtain trouble free, safe and enjoyable operation of your wheelchair. Please remember that when it comes to service and repairs, consult your authorized dealer.

II. PRODUCT DESCRIPTION

FR-W04 standard features:

- Rear-wheel drive via sealed drive axle.
- 17"x 15.43" comfort PU solid seat(standard).
- Seat with folding backrest and adjustable height.
- A multi-positional handlebar for greater maneuverability.
- A simple joystick control lever situated in front of the armrest when you are seated which controls speed, braking and direction.
- Independent braking systems.
- "State-of-the-art" micro-controller electronics ensures a smooth, comfortable and safe drive on most surfaces and gentle slopes no more than 6 degrees.
- One piece aluminum alloy chassis for ease of transportation.
- Your wheelchair can be easily folded without the use of tools.
- Battery pack can be easily removed and replaced.

Note: It is advisable that whilst transporting your wheelchair, you DO NOT sit in your wheelchair whilst is is in a moving vehicle. We recommend you strap down the wheelchair and transfer to the vehicle seat. When travelling on public transportation e.g. bus, train or cruise ship please ask the transportation authority of travel for their policy.

A range of accessories are available from your authorized Freerider dealer to further customize your wheelchair needs. Under no circumstances should you modify, add, remove or disable any feature, part or function of your mobility wheelchair.

III. ABOUT YOUR FR-W04

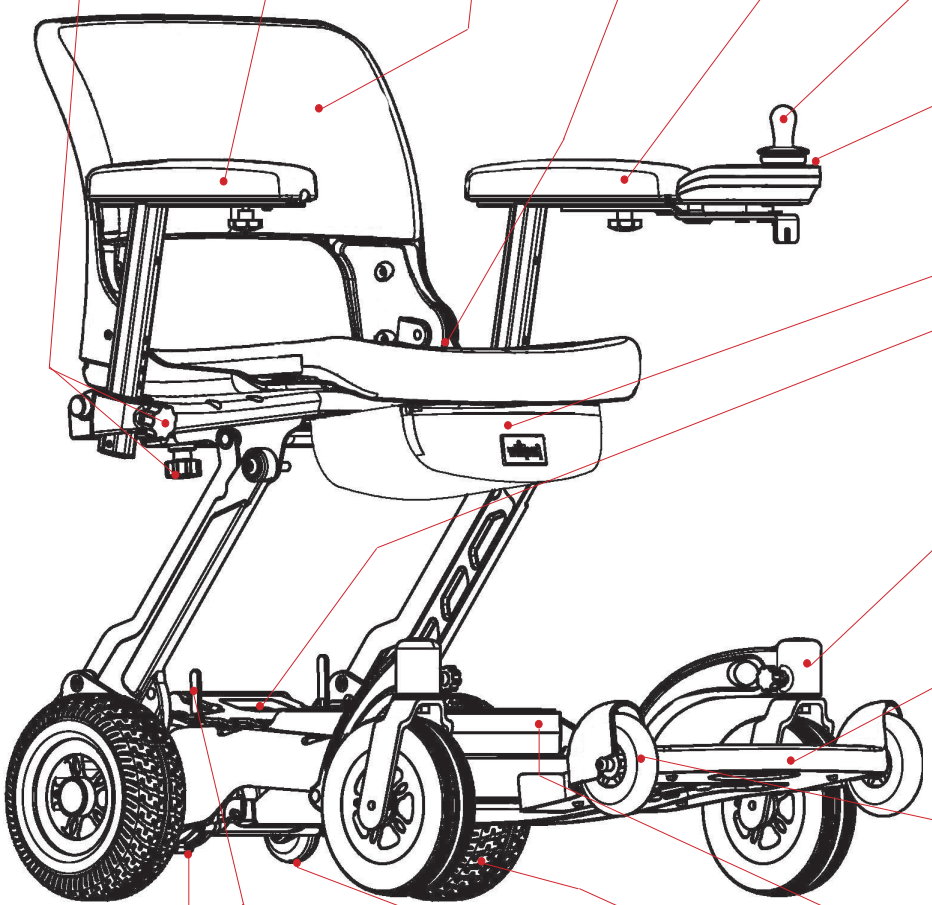

Seat lock knob

Armrest-R

Seat

Seat belt

Armrest-L

Joystick

Charger socket

Seat pocket

Seat lock indicator

Front caster & 7" wheel

Foot plate

Auxiliary wheel

Rear bumper

Magnetic brake release lever

Rear anti-tipping wheel

8" Rear drive wheel

Battery

IV. FR-W04 FEATURE GUIDE

Your wheelchair is delivered in a strong carton. When unpacking the carton, remove and dispose of all of the sharp metal staples which are located on the top to avoid injury. Remove all packing materials and follow the steps outlined in the Quick Start Guide shipped with your wheelchair.

We recommend you keep the outer box, packing inserts and battery box for future transport use. Safely dispose of all other packaging materials. If you need assistances with disposal, contact your local waste disposal authority for advice on properly disposing methods.

Your wheelchair is delivered fully folded. Follow the Quick Start Guide included with your wheelchair shipment before operating your wheelchair. A full technical specification of your wheelchair can be found at the rear of this manual. A great deal of thought and consideration have gone into the design of your state-of-the-art, life-changing wheelchair. Your wheelchair will help increase your mobility; thus, give you more time to enjoy life. The wheelchair is a compact, four wheeled vehicle that will allow you to navigate obstacles in confined areas. Aside from this, your wheelchair offers the following:

COMFORT
The contoured seat helps cushion you from vibrations of your journey, giving you maximum comfort. The wheelchair comes with a speed controller which delivers a smooth, jerk-free ride. For added peace of mind, the wheelchair comes with an automatic braking system.

VERSATILITY
The wheelchair seat assembly has 3 height adjustments (locked & 2 additional height adjustments) for added comfort and versatility.

SERVICE
Your FR-W04 has been designed to be service friendly. Sealed lithium battery which is virtually maintenance-free will give your wheelchair the power it requires. Should you need to take your battery pack on an aircraft, use the battery box originally shipped with your wheelchair for transport. The battery box has been specially designed to safely carry lithium battery of this size in accordance with the International Air Transport Association (IATA). (Please consult your carrier of choice for additional details).

SAFETY
The speed controller has been designed with extensive self-checking circuits to give you the maximum 'state-of-the-art' safety technology.The wheelchair comes with a fully automatic braking system for peace of mind in any environment.

CHARGING
Your wheelchair is fitted with a battery indicator on the joystick. When the battery meter is in the red zone, it is advised that you charge your battery. Follow the Battery & Battery Charging guidelines outlined in this manual.

IV. FR-W04 FEATURE GUIDE

JOYSTICK ADJUSTMENTS

1. The joystick of your wheelchair is designed to allow you to position in a comfortable driving position. It can be locked into numerous positions for your comfort and ease of transport.
2. The joystick:
   The controls of your wheelchair are through the joystick installed in front of the armrest.



Figure 1. Joystick

Power Button



To switch ON the wheelchair power System, press the Power button. The Power button is the only user input that can activate the system.
The Status indicator (through the Power button) will light up green, and the Battery Gauge will display the current battery status.
If there is a fault with the system when powering up, the status indicator will indicate the fault with a series of red flashes (see section 10 Diagnostics).
To switch OFF the system, press the Power button; the system will power down and the Status indicator will switch off.

Warning!

- **If the power switch is moved to the centre "off" position while your wheelchair is in motion, the electronic brakes will engage and your wheelchair will come to an abrupt stop!**

IV. FR-W04 FEATURE GUIDE

The joystick controls the direction



When the joystick is deflected from the centre position, the wheelchair will move in the direction of the joystick movement.
The speed of the wheelchair is proportional to the joystick deflection, so that the further the joystick is moved from the centre position, the faster the wheelchair will travel.

Caution!

DO NOT power off the wheelchair when your wheelchair is moving. Failure to observe this warning will result in sudden braking of the motor brake and place you in a dangerous situation. You should only power off your wheelchair while in motion in the case of an emergency. Continual use of powering off to stop may cause undue stress to the drive system and damage the main electronics. Be extremely cautious on slopes. Sitting upright in your seat allows for greatest stability on your wheelchair.

Battery Gauge

The battery gauge comprises five different LEDs (1 x red, 2 x amber, 2 x green), situated above the remote module's horn button. The number of LEDs lit depends on the status of the battery.

Battery Gauge	Battery Level
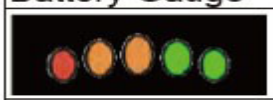	Fully charged
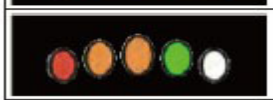	The battery voltage will drop in use
	Need care to battery power
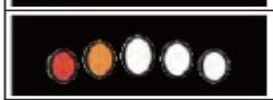	Battery need to prepare for charging
	Battery needs charging, If continue driving, power will turn off, you can not use wheelchair.

Controlling maximum speed

The speed dial allows the user to limit the maximum speed of the wheelchair (that is, the speed when the joystick is fully deflected) to suit their preference and environment.
The dial offers 10 discrete steps between the lowest speed (dial set to the left) and the highest speed (dial set to the right).
As a visual reminder, a speed symbol (shown left) is positioned just below the speed dial to indicate the low and high positions of the speed dial.



IV. FR-W04 FEATURE GUIDE

The horn

The horn button is located above the power button. Press the horn button to sound the horn. The horn will sound for as long as the horn button is pressed.



High voltage warning

A high voltage warning is indicated by all LEDs on, and the green LEDs flashing. This occurs when the battery voltage level has risen above the high voltage warning set-point.

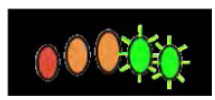

Note: Please find a safe place to stop and the device should be switched off.

Low voltage warning

A low voltage warning is indicated with the left-most LED flashing. This occurs when the battery voltage level has decreased below its low voltage warning set-point.



Note: *Need to immediately charge your device!*

Cut-off voltage

When the battery voltage decreases below the battery cut-off voltage:

- The status indicator will flash (Flash code 2).
- The first (red) LED will flash on the battery gauge.
- The horn will sound once every 10 seconds.



Sleep Model

When your wheelchair has been idle for 5 minutes or more, it will automatically go into sleep mode to conserve battery charge. The system can be woken from sleep mode by pressing the Power button, or, if enabled, by deflecting the joystick - see Enable Joystick Wakeup.

BATTERIES AND CHARGING

Your wheelchair requires a Lithium battery pack, deep-cycle batteries that are sealed and maintenance free. They are recharged by the supplied off-board charging system.

- Charge your wheelchair batteries for at least 3 to 4 hours prior to using it for the first time. Keep the batteries fully charged to keep your wheelchair running smoothly.

IV. FR-W04 FEATURE GUIDE

BATTERY PACK

Your wheelchair is shipped with a lithium battery, designed specifically for the wheelchair. Follow the steps outlined below:

1. Position battery pack into the wheelchair battery compartment under the seat as outlined in the Quick Start Guide.
2. Switch on your wheelchair. The battery gauge will now move to show the state of charge in the battery. If the LED of your battery gauge is in the green zone, your wheelchair is ready to drive.



BATTERY CHARGER

The battery charger is designed especially for your wheelchair. It is not suitable for any other powered mobility product. Only use the charger shipped with your wheelchair. The use of other chargers may permanently damage your battery and would invalidate the warranty.



Note: For travel boarding, according to IATA regulations, a maximum of one spare battery not exceeding 300 Wh or two spares each non exceeded 160 Wh may be carried; relevant battery capacity information see the back of the battery.

CHARGING YOUR BATTERIES



PROHIBITED! Removal of grounding prong can create electrical hazard. If necessary, properly install an approved 3-pronged adapter to an electrical outlet having 2-pronged plug access.



PROHIBITED! Never use an extension cord to plug in your battery charger. Plug the charger directly into a properly wired standard electrical outlet.



PROHIBITED! Do not allow unsupervised children to play near the wheelchair while the batteries are charging.



MANDATORY! Read the battery charging instructions in this manual and in the manual supplied with the battery charger before charging the batteries.



WARNING! Explosive gases may be generated while charging the batteries. Keep the wheelchair and battery charger away from sources of ignition such as flames or sparks and provide adequate ventilation when charging the batteries.



WARNING! You must recharge your wheelchair batteries with the supplied off-board charger. Do not use an automotive-type battery charger.

WARNING! Inspect the battery charger, wiring, and connectors for damage before each use. Contact your authorized Provider if damage is found.

WARNING! Do not attempt to open the battery charger case. If the battery charger does not appear to be working correctly, contact your authorized Provider.

WARNING! Be aware that the battery charger case may become hot during charging. Avoid skin contact and do not place on surfaces that may be affected by heat.



WARNING! If the battery charger is exposed to adverse or extreme weather conditions, then it must be allowed to adjust to the difference in environmental conditions before use indoors. Refer to the manual supplied with the battery charger for more information.

IV. FR-W04 FEATURE GUIDE

SAFE & LASTING BATTERY

1. For longest battery life, your battery should be re-charged when the battery meter indicator is in the red region or after use whenever possible.
2. If your battery will not be used for an extended period, fully charge the battery and disengage from the battery compartment of the wheelchair before storage. Battery charge will gradually deplete with time. Please do a refresh charge every month when the battery has been stored for an extended period of time. (Remember: Keeping your battery charged will help extend the life of your battery and ensure that the wheelchair is ready to go when you are.)

TO CHARGE YOUR BATTERIES FOLLOW THESE SIMPLE STEPS:

1. Switch off your wheelchair.
2. Your charger has two leads exiting from it. Plug the 3-prong plug to charging socket located on the joystick of your wheelchair and the second lead to the charger unit before plugging it into the wall socket.

Note: Your wheelchair will not drive if the charger is connected.

WHEELCHAIR CHARGER STATUS LIGHT INDICATOR

- Orange: charging.
- Flashing Green: 3/4 charged.
- Solid Green: charging complete.

GENERAL

Depending on the depth of discharge, the minimum time to recharge serviceable batteries fully will vary from 2.5 hour up to 3 hours. Please note that recharge time will vary between the minimum and maximum times indicated due to the varying states of battery use. Please be patient.

IV. FR-W04 FEATURE GUIDE

Q: Are there safety models in place even when the magnetic brake release has been disengaged?

A: Yes. If the attendant pushes the wheelchair too quickly while the magnetic brake release is disengaged, the wheelchair will brake or stop. If this happens, come to a complete stop to allow the safety mechanism to reset before starting again. If the attendant pushes slowly, the wheelchair will move easily without activating breaks.

Q: What if my wheelchair doesn't start?

A: (a) Check to see that the battery is installed properly in the battery compartment before turning on the power switch.
(b) If the battery is installed properly, check the battery indicator to see if the battery is fully charged. If the indicator is in the red zone or if the power switch flashes once per second your battery is low in power. Please charge your battery.
(c) If the power switch flashes 5 or 6 times per second and your battery indicator is in the green zone (charged state) make sure the magnetic brake release hasn't been disengaged. If the magnetic brake release is disengaged, turn off the power switch, engage the magnetic brake release then turn on the power switch before driving.

Q: How do I move forward, reverse and stop on the wheelchair?

A: When the joystick is deflected from the centre position, the wheelchair will move in the direction of the joystick movement.
The speed of the wheelchair is proportional to the joystick deflection, so that the further the joystick is moved from the centre position, the faster the wheelchair will travel.

Q: Am I able to adjust the speed of my wheelchair?

A: You can adjust the speed of your wheelchair by adjusting the speed control dial located toward the end of the joystick console. When the dial is adjusted to slow mode, the wheelchair is at its slowest. As you adjust the dial toward the right on the speed control dial, the speed of the wheelchair will increase to the top speed of 4 MPH.

Q: How long will it take to fully charge the battery?

A: The time required to fully charge your battery will depend on the depth of discharge on the battery. The minimum time taken to recharge the battery fully will vary between 2.5 to 3.5 hours.

IV. FR-W04 FEATURE GUIDE

Q: What do I do if I want to store my wheelchair and battery for an extended period of time?

A: When storing your wheelchair and battery for an extended period of time, fully charge your battery and remove the battery from the connector of the wheelchair. The battery should never be stored fully discharged. Fully discharging you battery pack and storing your wheelchair will put your battery in a “sleep mode”. Your battery may not be chargeable if left in the “sleep mode” for an extended period.

Q: How should I fold the wheelchair to check it for air travel?

A: The best way to fold the wheelchair and check it for air travel is to fold the base of the wheelchair along with the seat. By making the wheelchair flat, it is easier for the airline crew to handle and transport the wheelchair without damaging the wheelchair.

Q: How do I remove the battery from the battery compartment?

A: To remove the battery from its compartment, press the battery release button all the way in, while pulling on the back edge of the battery to release the battery from the locked position.

Q: How long will my lithium battery last?

A: The life of your lithium battery will depend on use and care. Like any consumable product, the battery will deteriorate in performance and reduce in range with time and use. Batteries tend to deteriorate in performance and reduce in capacity when left in a discharged state, left in cold conditions for extended periods or worn due to heavy use.

Q: Where can I drive wheelchair?

A: The wheelchair was designed to provide optimum stability under normal driving conditions for indoor use on dry, level surfaces. We realize that there will be times when you will encounter other surfaces. Please take caution when driving in any conditions. wheelchair is not recommended for uneven terrain, rain, snow, steep inclines, sand gravel.

Q: How do I unfold my wheelchair?

A: Refer to the Quick Start Guide provided in your packaging or the User's manual on unfolding your new wheelchair.

IV. FR-W04 FEATURE GUIDE

Q: What should I do if my battery doesn't charge?

A: Call the customer service department to troubleshoot. DO NOT remove the seal from the battery. Your battery warranty will be void if the seal is broken. If the battery is no longer under warranty, properly dispose of the old faulty battery and purchase a new wheelchair battery from an authorized dealer.

Q: How do I ensure my seat is locked in position?

A: Check to see that the seat lock indicator is red on both the right and left side to ensure your seat is locked in place. Refer to the Quick Start Guide to locate the seat lock indicator.

Q: Where can I purchase accessories and/or replacement parts for the wheelchair?

A: You can purchase accessories and wheelchair parts from authorized dealers.

Q: Where do I find the serial number for my wheelchair?

A: The serial number for your wheelchair can be found on the underside of the wheelchair. lift up the foot plate and set the wheelchair upright. The serial number will be on the inside frame of your wheelchair.

Q: Does the wheelchair go to sleep when it is idle for a long period of time?

A: The wheelchair will go to sleep when idle for over 5 minutes.

Q: How do I wake the wheelchair once it is in sleep modle?

A: There are 2 ways to wake the wheelchair in sleep mode. One way to wake the wheelchair is to toggle the joystick a couple of times to wake the wheelchair. The recommended way to wake the wheelchair is to power off the wheelchair before powering it back on.

IV. FR-W04 FEATURE GUIDE

Q: Will my battery deplete in power when it is in sleep mode?

A: Yes, your wheelchair battery will deplete in power even in sleep mode. If your wheelchair is idle for an extended period of time, it is recommended that you power off the wheelchair completely to conserve battery power.

Q: When should I charge my wheelchair battery?

A: It is recommended that you charge your battery when the battery indicator is in the red zone. This will prevent your wheelchair from stalling or coming to a complete stop when you are out and about.

Q: Do I need to remove the battery when I travel via air?

A: According to the International Air Transport Association (IATA) the removal of the lithium battery is required before your wheelchair can be checked without restrictions. In IATA's capacity requirements, you can choose to carry 10.5Ah (less than 300Wh) battery, but 16.5Ah battery is greater than the specified 300Wh, do not bring in the aircraft.

Note: *It is recommended that you check with your airline of travel prior to travelling in regard to checking your wheelchair. Please be advised that different airlines may handle the situation differently.*

Q: How can I ensure maximum battery life?

A: Simply put, a fully charged battery is a happy battery! A fully charged battery will provide reliable performance and extended battery life, so keep your battery fully charged whenever possible. Extra care must be taken when handling batteries, if you decide to fold your vehicle for transportation etc. Dropped battery, even from a very small height, can lead to damage of the internal components, causing premature battery failure. Do not open the battery casing, doing so will void the warranty.



Caution!

- **Used batteries must be disposed of properly. Please contact your local electronic waste facility to dispose of used batteries properly.**

V. INSTALL YOUR FR-W04

INSTALL THE BATTERY

1. Please follow the instructions to install the battery, Indication sticker on the on the battery compartment.
2. Place the battery pack into the battery compartment ensuring the front edge is located correctly into the connecting pins and that the sliding calliper is set, when fitted correctly it will make a clicking sound.
3. Please remove the battery from the chair when the wheelchair is being left unused for an extended period of time.
4. On installing the battery for the first time, please ensure the battery is fully charged.

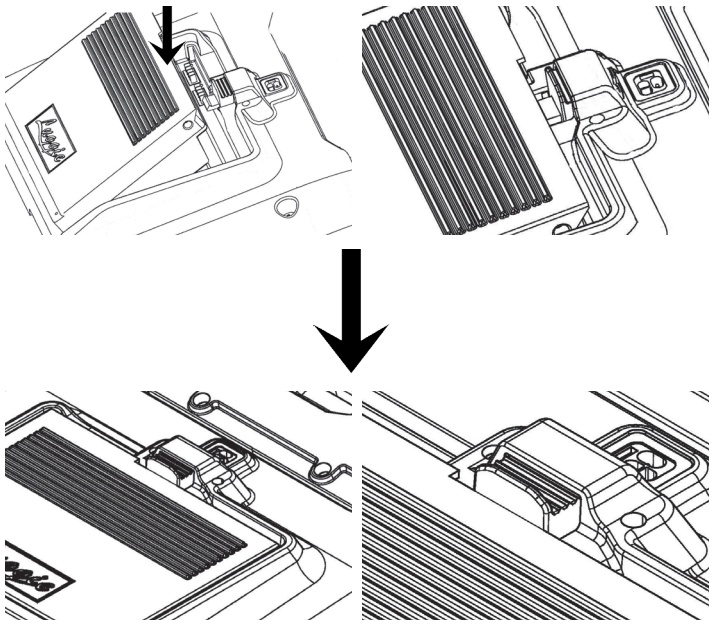

- Slide lithium battery with Luggie logo against the edge of the battery compartment under the seat before snapping it into place to lock.

Note: Usually has "clicking" sound.

Warning!

DO NOT open a battery pack. This can cause danger and loss of warranty. If you have any questions, please contact your dealer.

REMOVE THE BATTERY

Pressing sliding calliper and pull up the battery.

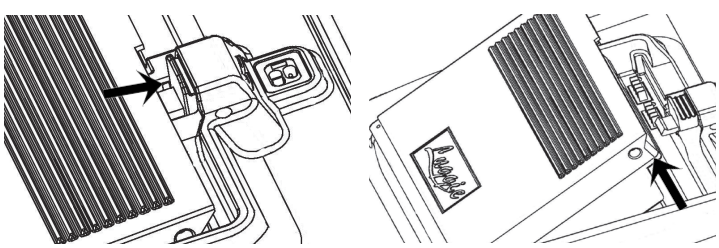

How to read the battery indicator meter?
Three parts on your battery indicator meter are:

1. Red : Depleted battery voltage.
2. Light Amber : Low voltage.
3. Green : Fully charged.

V. INSTALL YOUR FR-W04

INSTALL ARMRESTS:(It applies to both sides)

1. Install armrests holder(a) and fixing knob(b).
2. Rotate clockwise to release the knob(c) and adjust the level of armrest(d) and counter clockwiseto tighten knob(c).

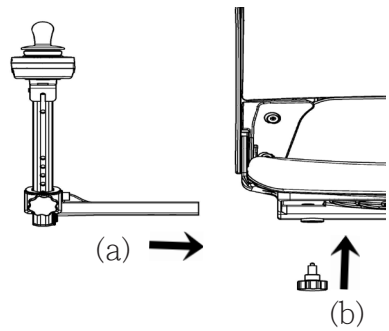

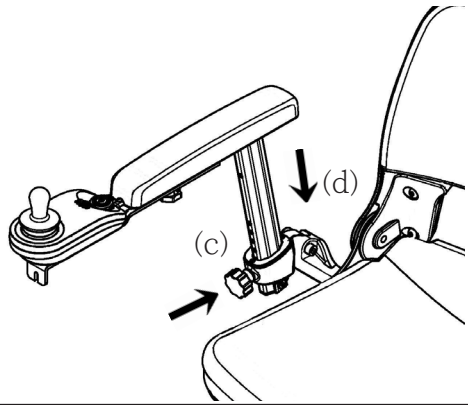

Caution!

■ **To adjust knobs then rotate clockwise to release and counter-clockwise to tighten.**

INSTALL JOYSTICK

The joystick of your wheelchair is designed to allow you to adjust in different length in a comfortable driving position.

(a) Install joystick in to joystick holder and fixed knob.
(b) Put joystick holder in to the armrest.
(c) Securing knob.
(d) Connection transmission cable.(d-1):Joystick/(d-2):chair cover

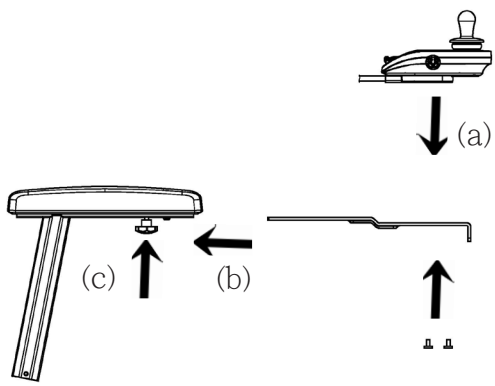

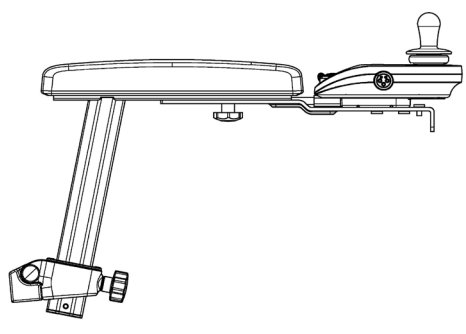

Completed

(d-1)

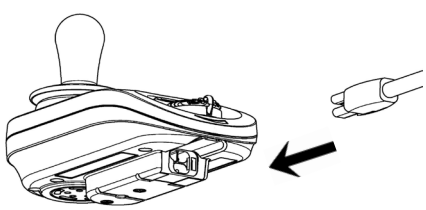

(d-2)

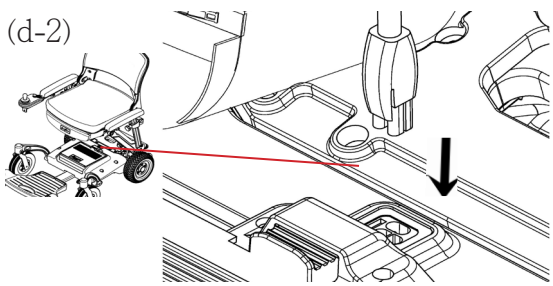

V. INSTALL YOUR FR-W04

CHANGE THE POSITION OF THE JOYSTICK

If you are suitable for left-handed operation, you can follow the steps below to replace the joystick position, this wheelchair apply to either left-hand or right-hand use.

TO CHANGE THE JOYSTICK POSITION:

a. Please turn off the power.
b. Remove the both sides armrest bottom shroud.
c. Take out two sides the armrest from the armrest bracket.
d. Loosen the cable clamp setscrew on the armrest bracket.
e. Place the armrest containing a controller cable in the other armrest bracket.
f. Tighten the cable clamp setscrew on the armrest bracket.
g. Please reopen power.



Warning!

DO NOT extrusion or bend to the joystick cable.

VI. SAFETY WARNINGS & INSTRUCTION LABELS

ADJUST THE SEAT HEIGHT

Pull backward on the seat lock handle to adjust the height of the seat while simultaneously lifting the seat.

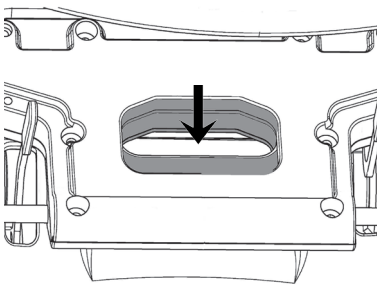

Folding

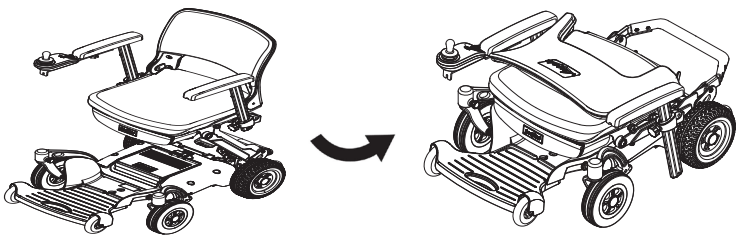

Note: Please make sure that the seat is properly locked and secured before sitting on the wheelchair. There are two windows on either side of the seat lock handle that will appear red when the seat is locked and properly secured. Securing the seat adjustment will help prevent accidents or tilting of the seat.

⚠ Warning!

- **If the installed wheelchair battery has been idle for a long period, the battery may be in a low power state.**
- **The best practice is to remove the battery when transporting the wheelchair so as not to accidently power on the wheelchair which cause injuries and drain the battery.**
- **Armrest Installation: The wheelchair armrest installation guide included with your wheelchair order. Insert and screw the adjustment knobs on the bottom side of the back of the seat assembly.**

Note: The knobs DO NOT need to be screwed on too tightly. These knobs are pull-pin knobs for you to adjust the width of the armrests.

⚠ Warning!

- **When the wheelchair is in operation, the armrests should not be in the raised position.**

⚠ Caution!

- **The backrest of your seat will not fully fold forward if the armrests are positioned too closely towards one another.**
- **ALWAYS buckle your seat belt when riding on the wheelchair.**

VI. SAFETY WARNINGS & INSTRUCTION LABELS

Your wheelchair is equipped with a manual freewheel mechanism for your convenience when you need to push the wheelchair.

- To put your wheelchair in freewheel mode, locate the magnetic brake release (red handled lever)located in the rear right hand side of your wheelchair under your seat as pictured.
- Make certain the power switch is switched off.
- Push the magnetic brake release (red handled lever)until a distinct click is felt to disengage the magnetic brake.You can now push your wheelchair with ease.

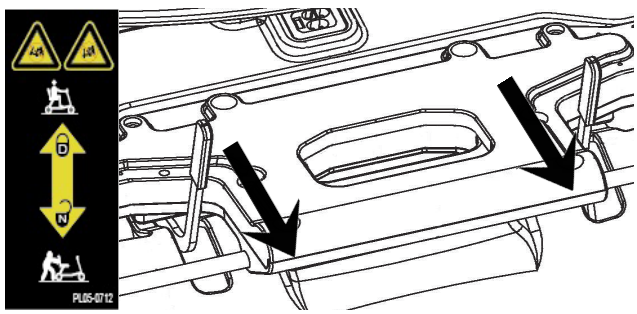

D = Drive (Brakes on the upside; unit in Drive Mode)

N = Neutral (Brakes Released; unit in Freewheel Mode)

Note: When your wheelchair stops in the freewheel mode while pushing, it is not stuck or broken. The safety feature on the wheelchair will automatically trigger when the wheelchair is pushed quicker than a slow walking speed.

To engage the drive system, simply pull the magnetic brake release lever backwards until a distinct click is felt. If the power switch was left on while in freewheel mode, simply power off and then on to enable driving mode.

Warning!

- **If your wheelchair is in the freewheel mode, you will not be able to drive. Dismount and re-engage the drive system by pulling back on the magnetic brake release (red handled lever). Remount on your wheelchair. Switch the power off and on to clear the fault. Your wheelchair will now drive again.**
- **Always double check that the freewheel mechanism, and magnetic bake release lever is disengaged or in the drive position before attempting to drive your wheelchair after it has been left unattended for a period of time. Failure to observe this warning may result in an accident.**

Sit on your wheelchair with the freewheel mechanism in the disengage position. Your wheelchair wheelchair has limited braking while in freewheel mode.

DO NOT use your wheelchair in freewheel mode without an attendant present. Personal injury may result.

DO NOT attempt to personally disengage your wheelchair in the freewheel mode while seated on the wheelchair. Personal injury may result. Ask an attendant for assistance.

DO NOT place your wheelchair in freewheel mode while on an incline. The wheelchair could roll uncontrollably on its own, causing personal injury.

Note: If you are able to push your wheelchair while in the drive mode, the drive system may be disconnected. DO NOT attempt to drive your wheelchair.

VI. SAFETY WARNINGS & INSTRUCTION LABELS

Warning!

- **Always double check that the freewheel mechanism, and magnetic bake release lever is disengaged or in the drive position before attempting to drive your wheelchair after it has been left unattended for a period of time. Failure to observe this warning may result in an accident.**

DO NOT attempt to operate your new wheelchair for the first time without completely reading and understanding all of the facts in this User's Manual.

- Your wheelchair is a state-of-the-art device designed to enhance and increase your mobility. If you have a medical condition, it is recommended for you to practice driving in the presence of a trained attendant.
- A trained attendant can be defined as a family member or care professional specially trained in assisting the wheelchair operator in various daily living activities.
- When you begin to use your wheelchair, you will probably encounter situations in which you will need some practice.
- Simply take your time and you will soon become confident and in control as you manoeuvre through doorways, on and off elevators, up and down ramps and over moderate terrains. Below are some tips, precautions and other safety measures that will help you become accustomed to the safe operation of your wheelchair.
- Your wheelchair is fitted with a number of safety warning & instruction labels.
- These labels communicate important warnings. Please familiarize yourself with their locations on your wheelchair.

SAFETY CHECK BEFORE RIDE

Get to know the feel of your wheelchair and its capabilities. We recommend that you perform a safety check before each use to make certain your wheelchair operates smoothly and safely. For details on how to perform these necessary inspections, see the "Care and Maintenance" section of this manual. Perform the following inspection prior to using your wheelchair.

- Check all electrical connections (e.g charging connectors). Make certain they are tight and not corroded.
- Check the contact area of the battery. Make certain they are serviceable and not corroded.
- Check that your battery has been fully charged.
- Check your wheelchair brakes. Ensure the wheelchair is not in freewheel mode.

Warning!

DO NOT carry passengers on your wheelchair. Your wheelchair is designed for a single occupant. Carrying passengers on your wheelchair may result in personal injury and/or property damage.

DO NOT exceed the weight capacity of your wheelchair. Doing so will invalidate your warranty and may result in personal injury and/or damage to your wheelchair. Freerider Corp. will not be held responsible for injuries and/or property damage resulting from failure to observe these weight limitations. Please also remember that carrying heavy objects will increase your total weight and may make your wheelchair unstable.

VI. SAFETY WARNINGS & INSTRUCTION LABELS

CORNERING

Excessively high cornering speeds may result in tipping. Factors which affect the possibility of tipping include, but are not limited to, cornering speed, steering angle (how sharply you are turning), uneven surfaces, inclined surfaces (such as heavily cambered pavements), riding from an area of low traction to an area of high traction (such as passing from grass areas to a paved area - especially at high speed while turning), and abrupt directional changes.

Warning!

- **When cornering sharply, reduce your speed. When using your wheelchair at higher speeds, anticipate changes in the road surface. This will greatly reduce the possibility of a tip or fall. To avoid personal injury or property damage always exercise common sense when cornering.**

Caution!

DO NOT corner at high speed! If you feel that you may tip over in a corner, reduce your speed and steering angle to prevent your wheelchair from tipping.

BRAKING

Your wheelchair is equipped with two powerful brake systems:

- Regenerative: This uses the electricity generated in your wheelchair drive motor to rapidly slow your wheelchair when the joystick is returned to the stop position.

- Electric/Mechanical Disc Brake: This activates mechanically after the regenerative brake slows your wheelchair to a near stop, or when power is removed from the drive system. Brake engagement is far more abrupt at higher speeds. It is important that you anticipate when the brakes will engage and that you are braced for the resulting deceleration.

Warning!

- **Your wheelchair can decelerate very quickly. DO NOT decelerate or turn abruptly when travelling at high speed unless absolutely necessary. Always grip the armrest tightly and position your feet firmly on the floor board of the wheelchair. Operators who cannot grip the armrest tightly and/or place their feet firmly against the floorplate should avoid travelling at high speed. Failure to observe this warning could result in serious personal injury and property damage. Always brace yourself firmly when decelerating your wheelchair.**

Caution!

- **Never drive down slopes at full speed. Always adjust your speed to the driving condition and allow for gradual descents on inclines no more than 6 degrees.**

VI. SAFETY WARNINGS & INSTRUCTION LABELS

OUTDOOR DRIVING SURFACES

Your wheelchair is designed to provide optimum stability under normal driving conditions i.e. dry, level surfaces composed of concrete or asphalt. There will be times when you will encounter other surfaces such as packed soil, grass and gravel.

These surfaces may not be sound and fail to give good traction, caution should be considered before driving on these types of surfaces to prevent stability problems resulting in injury or damage to you and your wheelchair. Always reduce your wheelchair's speed when driving on uneven terrain or soft surfaces.

Caution!

- **Avoid driving in long and unsafe grass that can become tangled in the gears of your wheelchair.**
- **Avoid snow. This can quickly build up around your wheels.**
- **Avoid loosely packed sand and gravel. If you feel unsure about a driving surface, please avoid that surface. Your wheelchair is a motorized device. Use your good judgment when travelling to avoid injury and damage to yourself, the wheelchair, and properties of others.**

STREET AND ROADWAY DRIVING

Warning!

- **Your wheelchair has not been designed for operation on public streets and roads. It is designed for operation on pedestrian pavements and traffic free shopping areas.**

Your wheelchair must be driven with due care and compliance with the Road Traffic Acts and conditions of the Highway Code. Always obey all local pedestrian traffic rules. Wait until your path is clear of traffic, and then proceed with extreme caution.

Note: *Always wear bright or illuminating clothing when driving your wheelchair. Be aware that it may be difficult for pedestrians and other motorized vehicles to see you when you are seated on your wheelchair. Do not use the wheelchair on roads unless crossing at a designated crosswalk when it is legal to do so.*

INSURANCE

Although it is not a legal requirement for accident insurance coverage (third party), it is a sensible precaution. Your dealer will be able to give you details of specialist insurance companies or your own insurance company will be able to advise you.

VI. SAFETY WARNINGS & INSTRUCTION LABELS

STREET AND ROADWAY DRIVING

Warning!

- **It is recommended that you DO NOT expose your wheelchair to any type of moisture at any time i.e. rain, snow or power washer. Such exposure may damage your wheelchair. Never drive through deep water or expose your wheelchair to sea water. DO NOT operate your wheelchair if it has been exposed to heavy moisture until it has been thoroughly dried out.**

DO NOT operate your wheelchair in icy or slippery conditions or on salted surfaces i.e. roads and pavements. Such use may result in accident, personal injury or adversely affect the performance and safety of your wheelchair.

DO NOT sit on your wheelchair while it is in a moving vehicle. Personal injury may result. Always make certain that your wheelchair is properly secured when being transported. Failure to comply may result in personal injury and/or damage to your wheelchair.

ACCESSING YOUR WHEELCHAIR

Getting on and off your wheelchair requires a good sense of balance. Please observe the following tips when getting on or off your wheelchair:

- Make certain your wheelchair is powered off.
- Make certain the seat and armrests are locked firmly into position.
- The armrests can be lifted up to allow easier access. If your armrests are installed, make certain you DO NOT attempt to drive with the armrests raised.
- The user should seat in the center of wheelchair.
- Turn on the power of the wheelchair.
- Put both hands on the armrests and use the joystick control lever to drive the wheelchair.

Warning!

- **Position yourself as far back into the wheelchair seat as possible to prevent tipping and injury.**
- **Avoid using the armrests for weight bearing purposes. Such use may cause the wheelchair to tip and cause personal injury and/or damage.**
- **Avoid putting all of your weight onto the floorplate, such use may cause the wheelchair to tip and cause personal injury.**
- **Any attempt to climb or descend an incline steeper than shown in the wheelchair specification at the rear of this manual may put your wheelchair in an unstable position and cause it to tip, resulting in personal injury. Never remove the anti-tipping wheels of your wheelchair. They are an important part of your wheelchair's design.**

DO NOT overload your wheelchair at the rear when climbing an incline. Always lean forward to provide the best stability and prevent rearward tipping.

VI. SAFETY WARNINGS & INSTRUCTION LABELS

TRANSFERS

Transferring onto and off of your wheelchair requires a good sense of balance. Always have an attendant or healthcare professional present while learning to properly transfer yourself. To eliminate the possibility of injury, We recommend that you or a trained attendant perform the following tasks before attempting a transfer:

- Turn off the power to the joystick.
- Ensure your wheelchair is not in freewheel mode. See page 20"Freewheeling your FR-W04"
- Turn the front caster wheels toward the transfer destination to improve wheelchair stability during transfer.
- Make sure both armrests are flipped up or removed from your wheelchair.
- Reduce the distance between your wheelchair and the object you are transferring onto.

Warning!

- **Avoid putting all of your weight on the wheelchair armrests and do not use the armrests for weight bearing purposes, such as transfers. Such use may cause the wheelchair to tip, resulting in a fall from the wheelchair.**

Note: With those considerations as to help users get onto or off wheelchair, the armrest is designed be able to lift up 90 degree easily to get more clearance.

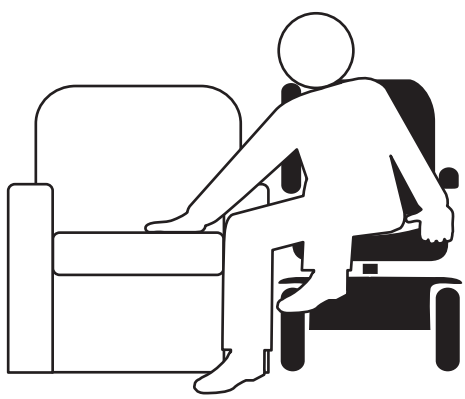

MODIFICATIONS

The wheelchair has been designed to provide maximum mobility. A range of accessories are available from your authorized wheelchair provider to further customize your wheelchair needs. Under no circumstances should you modify, add, remove or disable any feature, part or function of your mobility wheelchair.

Warning!

- **Failure to observe the above warning may result in personal injury and/or damage to you, your wheelchair and properties.**

VI. SAFETY WARNINGS & INSTRUCTION LABELS

INCLINES

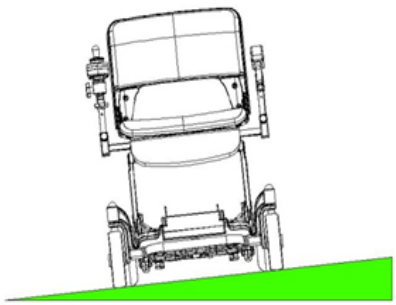

6 degrees maximum incline

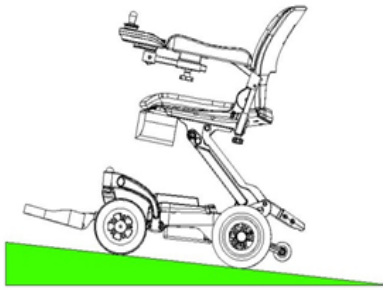

6 degrees maximum incline

More and more modern buildings are designed with disability access in mind. Ramps have specified percentage of incline designed for easy and safe access. Some ramps may have turning switchbacks (180 degree turns) that require you to have good cornering skills on your wheelchair. Proceed with extreme caution as you approach the downgrade of a ramp or other incline. Always sit with your back on the back rest of your seat, brace your hands on the armrest and position your feet on the floorplate of your wheelchair.

Take a wide arc with your wheelchair around tight corners. Your rear wheels will follow preventing you from cutting the corner short and bumping or getting hung up on raised curbs. When descending an incline, keep your speed adjustment set to the slowest speed to ensure a safely controlled descent.
Always drive down an incline facing forward only. If your wheelchair descent is quicker than you anticipated, allow the wheelchair to completely stop, then progress at a slower speed setting.

Warning!

- **Never drive down an incline at full speed. When climbing an incline, try to keep your wheelchair moving. If you must stop, start up again slowly and then accelerate smoothly with caution. Avoid sudden stops and starts. Lean forward towards to increase stability and prevent rear tipping when moving up the incline.**

STAIRS & ESCALATORS

Warning!

- **The wheelchair is not designed to travel up or down stairs or escalators. Always use an elevator. Failure to observe this warning may result in injury to yourself and others and damage your wheelchair.**

DISPOSAL OF ELECTRO-MOBILE WHEELCHAIR

In time when your wheelchair becomes unusable it must be disposed of in accordance with the laws implemented at that time. For further information regarding the recycling arrangements for this type of wheelchair and its batteries, contact your local authority or government department.

VI. SAFETY WARNINGS & INSTRUCTION LABELS

The following labels are positioned on your wheelchair. These labels communicate important warnings or instructions regarding the safe operation of you wheelchair. Please familiarize yourself with their location.



EMI-RFI-This product has been tested and passed at an immunity level of 20V/M. For more information refer to owner's manual.



Avoid exposure to rain,snow,ice,salt,or standing water whenever possible.



Do not use a cell phone,walkie,laptop,or other radio transmitter while operating.(ex. walkie-talkie)



Prevent clothing and foreign matter into the wheels.

Located on middle of cover



Before driving please check:

1. Do not use before reading user's manual.
2. Each folding frame to keep on stable.
3. Joystick is locked and adjusted in position.
4. Seat is locked on seat frame and engaged.
5. Limit for one person and do not stand up when operating power ON.
6. Maximum capacity is 320lbs.

Located on middle of cover



Uncompleted folding procedure will cause damage or injury.

Located on cover

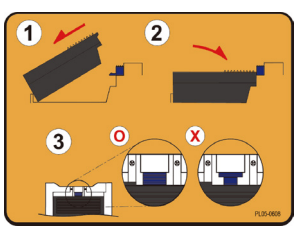

Please note sliding caliper installed properly.



Locked properly



Not locked properly

Lithium battery installment
Located on the battery compartment



CE mark

Located on cover

VI. SAFETY WARNINGS & INSTRUCTION LABELS



Pinch point

Located on both sides of chassis cover



Located on top of pull lever

Caution: DO NOT touch the locking of pull level when people are sitting on the chair.

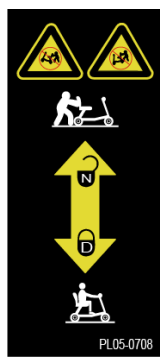

D Locked and in drive mode.

N Unlocked and in freewheel mode.

Located on cover

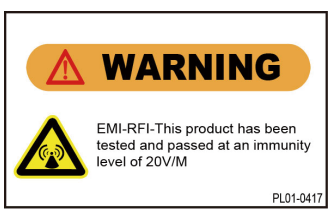

EMI-RFI-This product has been tested and passed at an immunity level of 20V/M.

Located on side of cover



Ensuring the scooter is powered off before you get onto or off your mobility product.

Located on front of cover



Nonspillable battery

Located on battery case



Read the owner's manual before operating scooter.

Located on front of cover



Address of manufacture:
No.22, Bengong 5th Rd., Gangshan Dist.,
Kaohsiung City 820, Taiwan(R.O.C.)

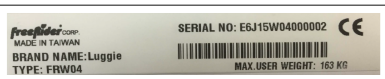

Data serial plate located on front wheel cross member

VI. SAFETY WARNINGS & INSTRUCTION LABELS

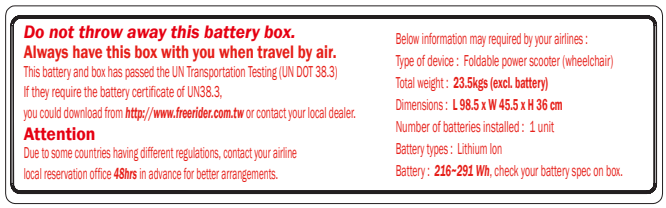

Located on 10.5Ah battery box

Do not throw away this battery box. Always have this box with you when travel by air. This battery and box has passed the UN Transportation Testing (UN DOT 38.3).Due to some countries having different regulations, contact your airline local reservation office 48hrs in advance for better arrangements.



According to IATA each passenger is allowed the capacity of one lithium battery(Less than 300Wh).

Located on 16.5Ah battery box

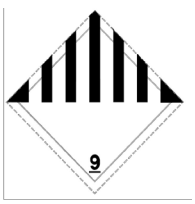

Safety Marks: Class 9, Lithium batteries.

Located on battery box



This way up.

Located on battery box

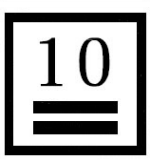

Maximum layer stack 10.

Located on battery box



Keep dry.

Located on battery box



Handle with care.

Located on battery box



Recycling: Corrugated fiberboard.

Located on battery box



Environmental Protection Use Period: 5 years.

Located on battery box

VI. SAFETY WARNINGS & INSTRUCTION LABELS

Warning!

- **If you are not an accomplished outdoors powered wheelchair driver, we strongly recommend that you first practice in an open area, free from traffic and preferably with an attendant who can assist you. When ready, proceed to power on the wheelchair. The battery indicator gauge will move to the amount of charge left on your battery and the status light on the power switch will illuminate as a solid. Gently press the joystick to move forward. To stop, simply release the joystick to trigger the brakes.**
- **When powering on the wheelchair, DO NOT accidently depress the joystick on your wheelchair. The above action will result in your wheelchair going into fault mode. To clear the fault, power off before powering back on.**
- **If your wheelchair has been adapted for left hand user, the joystick can be installed on the left armrest.**

LEARNING TO GET AROUND TIGHT SPACES

If you must steer in a tight spot, such as through a doorway or when turning around, stop, turn the wheelchair to where you want to go, and then apply the power gently. This will make the wheelchair move gently, with complete stability. Practice in an open area until you are proficient. Driving in reverse will require more attention

Remember: When driving in reverse, you have to control in the opposite direction to the way you want to go. Practice in open space as required. Please note, reverse speed is set to half the forward speed for your safety.

Warning!

DO NOT power off your wheelchair while it is in motion. Failure to observe this warning may irreparably damage the main electronic speed control unit or transmission. Always power off when your wheelchair is stationary.

GETTING THROUGH DOORWAYS

When you start using your wheelchair, you will meet some obstacles that will require some practice for smooth driving experience. Here are some common problems, with tips to help you master them quickly. You will soon be in control through doorways and travel up and down ramps with surprising ease by following the tips suggested below.

Approach an unfamiliar doorway slowly. Size it up. Does the door have a knob or push bar? Does it open toward you or away from you? Think in terms of using the power of the wheelchair to do the work for you! Hold the door knob or bar in one hand and apply power with the other hand.
If the door is self-closing, you can go though, allowing the door to close behind you. If not, just stop when you are clear of the door before pushing it close.

If however, the door opens toward you, hold the knob or bar with one hand and gently let the reverse power do the work. When the door is open wide enough, move forward, leaving the hand on the door to keep it away from the wheelchair and letting go as you pass the doorway.

VI. SAFETY WARNINGS & INSTRUCTION LABELS

If you're not able to move, your rear wheel is probably caught. Reverse and try again. Take your time. Relax, enjoy yourself. The techniques described above will take some practice. Practice makes perfect. Remember, your wheelchair can do the work without wearing you out!

MOVING ON AN INCLINE

More and more buildings have ramps for wheelchair access. Some have a change of direction in the middle. Good cornering skills are required. First, make a wide turn with your caster wheels around tight corners, so that your back wheels follow a wide arc to stay clear of the corner. If you stop while going uphill, the automatic parking brake will keep you safe. To start again, slowly depress the forward direction joystick lever. The parking brake will release and you will start to move again.

Remember: When you approach an upward incline, it is best to lean forward, (FIG 6). This moves the centre of gravity of your wheelchair towards the front of the wheelchair for improved stability. When going down an incline, keep your speed slow. This will keep you in a safely controlled descent. It is recommended for you to lean backwards as you descend. If you wish to stop completely, release the joystick lever, and you will come to a gentle stop. For your safety, always avoid sudden stops and starts.

Warning!

DO NOT exceed the incline guidelines or any other specifications presented in this manual.

CONTROL TRAVEL OVER STATIONARY OBSTACLES

Stationary obstacles (steps, curbs, etc.) must be avoided where possible. wheelchair has a ground clearance of 1.22 inches (3.1 cm). Proceed with extreme caution when driving near raised surfaces. Unprotected ledges and/or drop-offs such as curbs, porches, stairs etc. should be avoided.

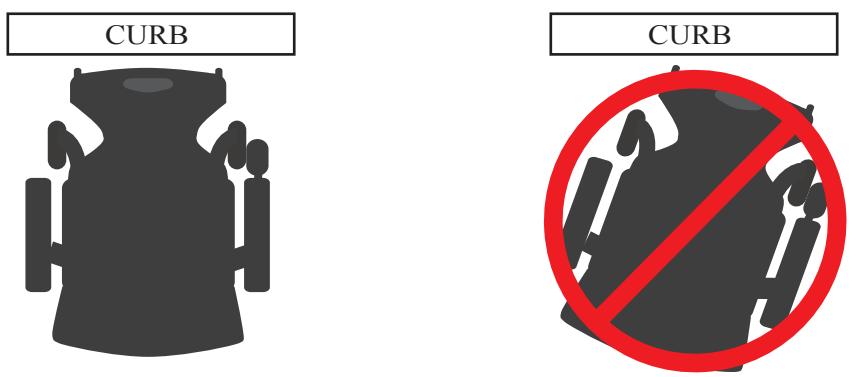

Most new pavements have wheelchair access ramps at intersections. Plan your route where possible to avoid poor and uneven surfaces. DO NOT attempt to ride up or down curbs as you will damage the integrity of your wheelchair.

VI. SAFETY WARNINGS & INSTRUCTION LABELS

MOVING OVER GRASS & GRAVEL

Care must be taken when attempting to drive over soft surfaces such as those found in parks, etc. These surfaces may look level; but, hidden dangers on these surfaces may make your wheelchair become unstable. Avoid unkempt and wet grass, loose deep gravel and/or sand. DO NOT exceed the capabilities of your wheelchair. Always have an attendant to assist you in circumstances where you are not certain of the safe travel conditions or the terrain. Always anticipate and think safety first.

Caution!

- **When climbing inclines, the maximum safe gradient limit is 6 degrees. To ensure your safety and the stability of the wheelchair, always have the anti-tipping wheels fitted to your wheelchair (FIG 7) when climbing inclines or manoeuvring obstacles. Always avoid turning on slopes or climbing curbs.**
- **Always make certain that your wheelchair is in full working order before attempting to drive.**
- **Always lean forward when ascending an incline and backwards when descending an incline to ensure stability as you drive.**

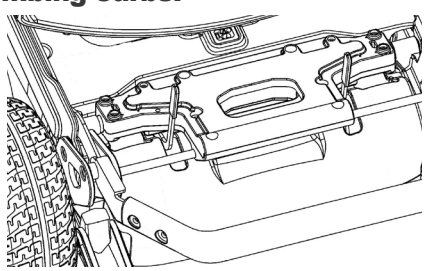

- **Never attempt to drive beyond the design capability of your wheelchair. Observe weather conditions at all times. Tyres can slip on wet or icy surfaces.**

DO NOT drive through deep water or leave your wheelchair exposed to heavy rain especially during or after wet weather conditions.

DO NOT attempt to turn when navigating up an incline. It is advised that you only turn when all wheels of your wheelchair are fully on or off the incline. Failure to observe this caution may result in the wheelchair toppling over.

Please Note:
The stability of your wheelchair is dependent on a number of factors which you should consider before attempting to climb an incline or other obstacles:
(a) your height;
(b) the height of your seat;
(c) your weight and
(d) the angle of the incline you are attempting to climb.
All of these factors can affect the stability of your wheelchair. If you are unsure of your ability to navigate through an obstacle, incline or a surface, try another route. Always think 'safety first'.

VII. TRANSPORTING YOUR FR-W04

Whether it is for a holiday, a day out to visit family and friends, or a trip to go shopping, your wheelchair can be taken along. Depending on the size or model of your car, you will be able to load your wheelchair in one of the following methods.

Folding wheelchair

- Power off.
- Put down the both side armrests.
- Pull backward on the seat lock handle to adjust the height of the seat while simultaneously lift down the seat.

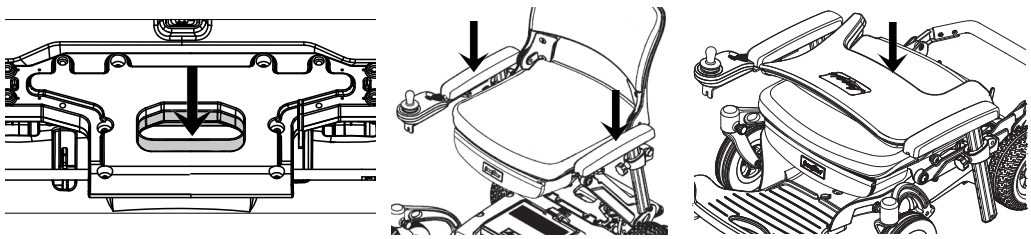

Steps to fold the foot plate

- In order to facilitate the user to get on and off the wheelchair, we provide a foldable
- footrest, which can be operated according to the following diagram.
- Pull out the fixed pin near the footrest, insert the pin into the hole near the wheelchair, and then turn up the footrest.
  On the contrary, put down the pedal and insert the fixing pin back into the fixing hole near the pedal to fix the pedal.

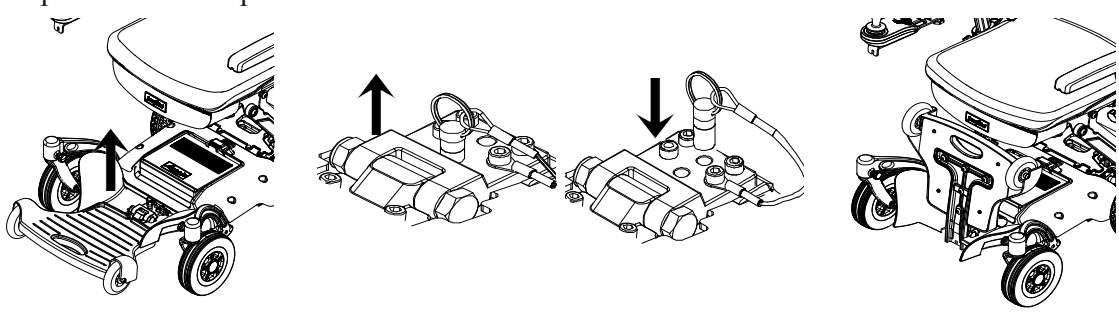

- Load your wheelchair with the aid of a car lift. Your dealer will be able to advise on suitable equipment.

- Alternatively, you can pull open the knob and removing the front caster wheel, then put the loading mat on the car trunk entry, which can easily be stored in the rear car trunk, and use auxiliary wheel to move and arrange for proper location .

- Follow these simple instructions for folding your wheelchair. This procedure can be carried out quickly and without the use of tools. It is recommended that you transport the battery in the box that shipped with your wheelchair and lay the battery on level surface.

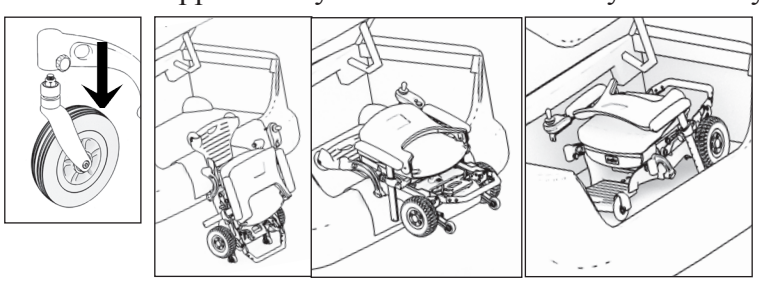

VII. TRANSPORTING YOUR FR-W04

Warning!

DO NOT power off your wheelchair while it is in motion. Failure to observe this warning may irreparably damage the main electronic speed control unit or transmission. Always power off when your wheelchair is stationary.

Caution!

- **Protect clothing when lifting your wheelchair. Some components may have lubricating fluids on their surfaces. Work out the best position to stow the components of your wheelchair. Your wheelchair will increase the load in your car, please remember this and adjust your driving to suit this condition.**

Note: When using access ramps to load your wheelchair into a car, Always keep your body clear of your wheelchair to prevent injury. Never ride your wheelchair when loading it into a vehicle, failure to observe this warning could put you into a dangerous situation. Always make certain your wheelchair and any ancillary parts are correctly tied down in the transport vehicle to prevent movement during acceleration, deceleration, and braking. Most modern cars have anchor points on the bed of your car/trunk/SUV to secure your wheelchair and accessories.

Remember: You have increased the load in your car, please take account of this and modify your driving accordingly.

Caution!

- **The wheelchair should be stowed in the trunk of a car or in the back of a truck or van with batteries removed and properly secured.**

Warning!

- **Always make certain that your wheelchair is stored in the transport vehicle with the magnetic brake release system in the disengaged (brakes locked) position.**
- **Batteries should not be transported with any flammable or combustible items.**

It is advisable that whilst transporting your wheelchair, you DO NOT sit in your wheelchair whilst is is in a moving vehicle. We recommend you strap down the wheelchair and transfer to the vehicle seat. When travelling on public transportation e.g. bus, train or cruise ship please ask the transportation authority of travel for their policy.

VIII. BATTERY AND BATTERY CHARGING

Your wheelchair has a lot of power. Keeping wheelchair working to its maximum potential means that its battery must be maintained at full potential. Nightly recharging, after use, will help giving the battery a longer life and will ensure your wheelchair is always ready to go when you are.





Note: For travel boarding, according to IATA regulations, a maximum of one spare battery not exceeding 300 Wh or two spares each non exceeded 160 Wh may be carried; relevant battery capacity information see the back of the battery.

BATTERY PACK

Your wheelchair is shipped with a lithium battery, designed specifically for the wheelchair. Follow the steps outlined below:

- Position battery pack into the wheelchair battery compartment under the seat as outlined in the Quick Start Guide.
- Switch on your wheelchair. The battery gauge will now move to show the state of charge in the battery. If the needle of your battery gauge is in the green zone, your wheelchair is ready to drive.

Warning!

DO NOT attempt to open the covering of the battery. Failure to observe this warning will invalidate your battery warranty.

For air travel, please consult your carrier prior to departure. They will need advance warning that you wish for them to carry the lithium battery. Please note that each carrier reserves the right not to carry what may be termed Hazardous cargo. FreeRider cannot be held responsible for their final decision.

BATTERY CHARGER

The battery charger is designed especially for your wheelchair. It is not suitable for any other powered mobility product. Only use the chargers shipped with your wheelchair. The use of other chargers may permanently damage your battery and would invalidate the warranty.

VIII. BATTERY AND BATTERY CHARGING

SAFE & LASTING BATTERY

- For longest battery life, your battery should be re-charged when the battery meter indicator is in the red region or after use whenever possible.
- If your battery will not be used for an extended period, fully charge the battery and disengage from the battery compartment of the wheelchair before storage. Battery charge will gradually deplete with time. Please do a refresh charge every month when the battery has been stored for an extended period of time. (Remember: Keeping your battery charged will help extend the life of your battery and ensure that the wheelchair is ready to go when you are.)

To charge your batteries follow these simple steps:

- Switch off your wheelchair.
- Your charger has two leads exiting from it. Plug the 3-prong plug to charging socket located on the chassis of your wheelchair and the second lead to the charger unit before plugging it into the wall socket.

Note: If you need to use an extension cord for your main electric supply, make certain that it is safe and suitable for the charge current.

Note: Your wheelchair will not drive if the charger is connected.

THE WHEELCHAIR CHARGER STATUS LIGHT INDICATOR

- Orange: charging.
- Flashing Green: 3/4 charged.
- Solid Green: charging complete.

GENERAL

Depending on the depth of discharge, the minimum time to recharge serviceable batteries fully will vary from 2.5 hour up to 3 hours. Please note that recharge time will vary between the minimum and maximum times indicated due to the varying states of battery use. Please be patient.

TROUBLESHOOTING

- If the green indicator is off, check the AC input. If the AC input works normally, the battery charger may be defective.
- If the green indicator is working normally but the charging indicator (orange) is off, the polarity connection may be reversed. The output connection may be short or open.
- If the charging indicator (orange) is still off when charging, the battery charger may be defective.
- If the charging indicator (orange) does not turn green (charged state), the battery is not being charged normally. Please stop charging and have the battery repaired or checked by an authorized wheelchair service center.
- If the charging indicator goes from orange to green (fully charged state) immediately, the battery may be fully charged.
- If the battery does not charge, the battery may be defective. Have it checked by an authorized wheelchair service center.

IX. FREQUENTLY ASKED QUESTIONS

Q: What should I do if my battery doesn't charge?

A: Call the customer service department to troubleshoot. DO NOT REMOVE THE SEAL FROM THE BATTERY. YOUR BATTERY WARRANTY WILL BE VOID IF THE SEAL IS BROKEN. If the battery is no longer under warranty, properly dispose of the old faulty battery and purchase a new wheelchair battery from an authorized provider.

Q: Who do I contact if I need replacement parts for my wheelchair?

A: Contact your authorized wheelchair provider for replacement parts on your wheelchair.

Q: How do I ensure my seat is locked in position?

A: Check to see that the seat lock indicator is red on both the right and left side to ensure your seat is locked in place. Refer to the Quick Start Guide to locate the seat lock indicator.

Q: What is the return policy on my wheelchair?

A: Refer to the warranty sheet shipped with your wheelchair.

Q: When should I charge my battery?

A: Charge your battery when the battery indicator is in the red region on the battery indicator on the joystick console of your wheelchair.

How can I get the maximum operating time per charge?

Rarely do we have the ideal driving situation (smooth, flat, hard terrain with no wind or curves and warm temperatures). More often, we are presented with hills, uneven and loosely packed surfaces, curves, wind, cold and heavy loads. Conditions described above will affect the distance or running time of your battery charge.
Here are a few suggestions for obtaining the maximum range per charge:

- Always charge your battery fully prior to your trip.
- Plan your trip in advance to avoid inclines, curbs and soft surfaces.
- Limit your baggage weight to essential items.
- Try to maintain an even speed to avoid stop and start driving.
- Ensure recommended routine servicing of the vehicle's components.
- DO NOT allow metal objects to short out the terminals of your battery. This could cause the battery to explode and cause injuries.
- DO NOT allow your battery to freeze. If frozen allow it to naturally thaw out before charging, failure to observe this warning may damage the battery.
- If you need to replace your battery, contact your authorized provider.
- Always handle battery with care.

IX. FREQUENTLY ASKED QUESTIONS

BATTERY WARRANTY

The battery shipped with your wheelchair has a limited warranty to be free of material defect or workmanship for a period for 12 months. Any battery faults due to a defect in manufacture or materials will be obvious within a few weeks of use. The condition of your battery will be dependent on the actual use of the wheelchair and how often the battery is cycled, ie discharged and charged. Gradual deterioration in performance and reduction in range is normal and associated with fair wear and tear, misuse or accidental damage. Under these circumstances, the warranty will not apply. Some users due to their hectic lifestyle, weight or operating conditions, may wear their battery out during the original battery manufacturer's guarantee period due to extensive use of their wheelchair. The battery has a defined number of discharge cycles it can make. The more times you use your wheelchair the more cycles your battery will make; the shorter its life span.

Remember: The longevity of your battery will be dependent on your care in breaking in the battery.

Best practice for new battery:

- Fully charge new battery prior to your initial use. This will bring your battery up to about 88% performance.
- Ride your vehicle around the house or garden. DO NOT venture too far away until you become accustomed to the controls and feel of the wheelchair. This will gently break in your battery.
- Give your battery another full charge and run the wheelchair again. The battery will now perform to over 90% of their full potential.
- After ten to fifteen charging cycles, the battery will top off at 100% charge and last for an extended period. It is important that you follow the steps outlined above for the longevity of your battery.

X. CARE AND MAINTENANCE

CLEAN WHEELCHAIR

The painted body work on your wheelchair can be lightly washed with clean soapy water. DO NOT use abrasive cleaners or strong detergents. The use of abrasive or strong detergents may fade the color. Use cleaning solutions safe for automobiles. Salt contact (ocean air) is very corrosive to metal parts on your wheelchair.

Caution!

DO NOT hose down your wheelchair with a power washer. Water could be forced into the electronics and cause permanent damage to your wheelchair.

Always use a soft cloth to clean your wheelchair. Auto polish may also be used to keep the paint work and bright chrome parts in pristine condition. The metal frame work of your wheelchair should be cleaned once a year and any paint work damaged should be treated to prevent further attack from the elements. DO NOT store your wheelchair in damp conditions. This may affect the electronics if left for very extended period of time. Moisture, if left unattended can cause deterioration to the metal frame.

ELECTRONICS

Servicing of the drive electronics and charger should only be carried out by your authorized wheelchair service dealer. These units are sealed and should not be opened. BROKEN SEALS WILL INVALIDATE YOUR WARRANTY. Below are some pointers to keep in mind.

- DO NOT operate your wheelchair in exceptional weather conditions i.e. very heavy rain. Cover your wheelchair if it is left unattended and outside for a long period of time.
- DO NOT drive your wheelchair through deep water. This could damage the electronic
- speed controller. Sea and road salts are very corrosive and should be avoided if possible.

DRIVE TRANSMISSION LUBRICATION

The wheelchair is fully lubricated on delivery. You will not need to fill transmission fluid on your wheelchair.

Note: Your wheelchair transmission is filled with a special lubricant. DO NOT attempt to force grease into the transmission as this will contaminate the original lubrication and will invalidate your warranty.

Caution!

- **When lifting the transmission, keep well away from clothing. It is normal to find a light film of lubrication around this part.**

X. CARE AND MAINTENANCE

MOTOR BRAKES

Safety Note: For your own safety, we recommend that you check the function of your wheelchair brakes prior to any journey. If the motor brake is functioning correctly and the drive is engaged, you will not be able to push your wheelchair when the wheelchair is powered on or off without the use of the joystick. Refer to the Freewheeling Your wheelchair section for additional details.

Warning!

- **Letting go of the joystick while driving will reduce the speed of your wheelchair very quickly. If you notice a change in the normal slowing/braking condition of your wheelchair, or if your wheelchair does not slow down quickly, please do not use your wheelchair. Contact your authorized dealer.**

TYRE SERVICING REAR WHEELS

To remove a rear wheel from your wheelchair follow the instructions below **(ONLY COMPETENT PEOPLE SHOULD CARRY OUT THESE PROCEDURES)**.

- Power off your wheelchair.
- Using a suitable body stand, lift the side of the vehicle you wish to service off the ground. Place the stand under the chassis. Care must be taken when lifting heavy loads. You may need a friend to help you. Please be safe. Do not lift the wheelchair by the plastic body work.
- With the aid of a 13mm spanner (not supplied), remove the centre hub nut and washer.
- Slide the wheel from the mounting axle. Rear wheels are fitted to the drive axle via a hub which is located onto a key. These wheels fit tight onto the axle and may need some pressure on the wheel hub to release them from the axles. Look for spacing washers and take care not to misplace the drive key which fits between the wheel hub and the axle shaft.
- To reassemble the wheel simply follow the above procedure in reverse order noting the following points:
- Make certain that you replace any spacing washers and keys in the order that they were moved, the exact pressure the fixing bolt should be tightened to 250lbs.
- Locking Screws:
  The special 'locking' center hub screws may lose its effectiveness when it has been removed over a number of times. New screws should be used each time the wheel is removed. Contact your authorized wheelchair provider to purchase parts or have the tires replaced.

TYRES

Check the condition of your tyres regularly. Look for signs of wear, cuts and foreign objects lodged in the tread of your wheelchair tires.

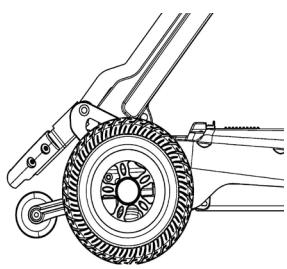

X. CARE AND MAINTENANCE

BATTERY

Keep your battery well charged (see Battery Charging section of this manual). Keep battery clean and store in dry, frost-proof location. Your wheelchair dealer will be able to test your battery for its condition.

Note: Service charge may apply for this service.

Caution!

- **Contact Airline for authorization to board with Wheelchair.**
- **DOT Regulations between 8-25 Grams Lithium and less than 300 Watts is allowed.**
- **Recharge your battery immediately if battery indicator is in the red.**
- **We strongly recommend that you fully charge your battery when storing your wheelchair and after every use.**
- **Never store a fully discharged battery.**
- **Disconnected battery from the vehicle when storing for long periods of time.**
- **Fully recharge your battery at least once a month if the battery is not in use continually.**

The warranty does not apply if failure to observe the cautions above !

Warning!

- **Contact your electronic waste disposal facility to properly dispose your battery.**

Note: The charger supplied with your wheelchair is specifically designed for Wheelchair battery and may not work correctly with other brand of battery. (Refer to Batteries and Battery Charging section of this manual for additional details.)

LUBRICATION

The wheelchair is designed with low maintenance in mind. Wheel and bearings are sealed for life. The following are suggested service intervals for your wheelchair.

Caution!

- **Only drive your wheelchair if it is in full working order.**

RECOMMENDED SERVICE INTERVALS DAILY CHECKS

- Operation of driving brake
- Operation of seat lock
- Tyre condition
- Battery capacity

X. CARE AND MAINTENANCE

WEEKLY CHECKS

- Armrest adjustment knobs
- Allow battery charger to go through a full recharge cycle. Wait until the green light illuminates.
- Clean paintwork with auto shampoo. DO NOT use harsh abrasives or power washer.

SIX MONTHS CHECKS

- Tyre wear, replace as necessary.
- All fasteners and fittings for sound function.
- Battery connections.
- Inspect all electrical plugs and sockets for damage, good contact and fit.

ANNUAL CHECKS

- Front wheel bearings for wear.
- Chassis for sound welds.
- Rear drive wheel hub keys.
- All wheel bolts.
- Drive axle securing bolts.
- Motor mounting bolts.
- Magnetic motor brake disc and function.
- Main wiring loom for damage.
- All steering components.
- Clean chassis and repaint any exposed parts.
- Replace any damaged axle seals.
- Cycle charge for full operation function.
- Cycle test batteries for operating capacity.

(Ask your authorized dealer for details.)

Note: Annual inspection will include weekly, semi-annual and annual checks listed above.

LUBRICATION

Use a general purpose noncorrosive lubricating fluid (i.e. WD-40) on moving parts. All wheel bearings are factory sealed and should not normally need lubricating. bearings should be lubricated with a general purpose bearing grease. Your drive axle is factory filled with a special lubricant and will not normally need replacing.



Caution!



DO NOT mix other lubricants with this factory fitted drive axle lubricant. Failure to observe this caution will invalidate your warranty.

Note: Service interval recommendations are guidelines for proper care and maintenance of your wheelchair. More frequent use of your wheelchair may require more frequent adjustments to these suggested intervals listed above.

X. CARE AND MAINTENANCE

Q: What if my wheelchair will not start?

A: Check to see whether the power switch has been switched 'on'. If it is, the battery indicator meter will be operating. If the status light on your joystick is flashing once per second, your battery is low in charge. Charge your battery.

Q: What if the status light on the power switch fail to operate when the switch is in the 'on' position?

A: Make sure the charger is not plugged into the charge socket of your wheelchair. When your wheelchair is being charged, you will not be able to drive.

Q: What if my wheelchair stops for no apparent reason?

A: Your battery may not be working properly or if the park brake is mechanically released or the park brake is faulty, the chair will not be able to drive. A park brake Error flash code will occur and the power wheelchair will not be able to drive.
If the wheelchair moves at a higher speed than Anti-Rollaway max speed, the controller will automatically power-up and then slow the wheelchair down, using dynamic braking, until it stops. Contact your authorized wheelchair provider.

Q: What if the battery indicator is operational but the status light flashes and the wheelchair is inoperable?

A: 1. Check the status fault codes indicated by the LED on your power switch flashing.
2. Check to make sure that the magnetic brake release is not disengaged. If the magnetic break release is disengaged, the status light on the power switch will flash five or six times.

Q: What if my wheelchair does not slow down or behave erratically?

A: Switch off the power and contact your authorized wheelchair dealer.

Warning!

- **If you find for any reason your wheelchair does not reduce speed when you let go of the joystick, power off your wheelchair. The parking brake will activate immediately and stop your wheelchair. Be aware that the wheelchair will stop very suddenly. Hold onto your armrest and sit back in your seat.**
- **The above operation should only be carried out in an emergency; continual use of this operation will damage the drive transmission and motor brake. Inform your authorized wheelchair dealer before using your wheelchair again.**
- **If you feel for any reason that your wheelchair is not driving correctly or making unusual noise, stop using the wheelchair and contact your authorized wheelchair dealer.**

X. CARE AND MAINTENANCE

FAULT DIAGNOSIS

Faults with the main speed controller are rare. Most faults on powered wheelchair are associated with wiring or bad connections due to poor maintenance or incorrect installation of connectors when assembling the wheelchair after transporting the wheelchair. If your wheelchair fails to operate refer to the status fault codes on the following page for reference. If in doubt, consult the dealer from whom you purchased your wheelchair.

Caution!

DO NOT OPEN THE BATTERY HOUSING. BREAKING THE BATTERY SEAL VOIDS THE WARRANTY AUTOMATICALLY!

SPEED CONTROLLER SETTINGS

Warning!

- **Performance adjustments should not be made to the joystick which could compromise the integrity of the speed controls and put the operator in serious danger. Performance adjustments should only be made by an authorized wheelchair technician fully trained and conversant with the programming and capabilities of the wheelchair.**
- **Incorrect settings could cause injury to the wheelchair operator and/or to bystanders or damage to the wheelchair and/or surrounding property. If in doubt, consult your authorized dealer.**

FAULT DIAGNOSIS

The speed controller system incorporates a sophisticated microprocessor which continually monitors the wheelchair systems to ensure safe and reliable operation. Safety conditions monitored by the speed control are listed below:

- Speed control system integrity
- Internal voltages and circuits
- Motor voltages and circuits
- Freewheel speed limiting downhill
- Battery voltage

When the battery voltage is low, the 'status' indicator light situated on power switch will flash slowly as a warning for you to recharge your batteries. If the 'speed controller' detects a fault, the light will flash more rapidly, with the number of flashes indicating the nature of the fault. If your wheelchair is switched 'on' but not operated for a set period of time (5 minutes approximately) the speed controller system will automatically turn itself 'off' to conserve valuable battery energy. This fault can be cleared when you power off then power back on.

XI. BASIC FAULT FINDING

STATUS FAULT CODES

Flash	Error Description	Meaning
1	Remote / Joystick Error	■ Check cables and connectors Replace Remote
2	Network Or Configuration Error	■ Check cables and connectors ■ Check Bluetooth pairing ■ Reconfigure the system ■ Recharge the battery ■ Check charger ■ Replace modules ■ Contact supplier
3	Left Motor Error	■ Check cables and connectors ■ Replace power module ■ Check and/or replace left motor
4	Right Motor Error	■ Check cables and connectors ■ Replace power module ■ Check and/or replace left motor
5	Left Park Brake Error	■ Check cables and connectors ■ Check left park brake is released
6	Right Park Brake Error	■ Check cables and connectors ■ Check left park brake is released
7	Module Error (other than remote module)	■ Check cables and connectors ■ Check modules ■ Replace LiNX Access Key ■ Replace power module ■ Recharge battery
If the chair stalled, reverse away or remove obstacles, or if the chair was moved while turned off, cycle the power.		

XII. TECHNICAL SPECIFICATION

Model Number	FR-W04
Overall Length(Unfold)	95.1 cm / 37.44 inches
Overall Length(Fold)	80.6 cm / 31.73 inches
Overall width	60.6 cm / 23.86 inches
Folded width	60.6 cm / 23.86 inches
Folded height(W/O Armrest)	43.2 cm / 17 inches
Obstacle climbing	2.5 cm / 0.98 inches
Ground clearance	3.1 cm / 1.22 inches
Maximum load	145 kgs / 320 pounds
Range up to *4*5 (With maxomum load 320lbs)	12 km/ 7.5miles(10.5Ah) 18.9 km/ 11.8miles(16.5Ah)
Total Weight	34.8 kgs / 76.56 lb
Turning radius	78 cm / 30.7 inches
Maximum speed forward	6.4 km / 4 mph
Povit width-different steering	116.5 cm / 45.87 inches
Backrest angle	1 °
Li-Ion Battery	10.5 Ah or 16.5Ah
Seat width	43.2 cm / 17 inches
Seat depth	39.2 cm / 15.43 inches
Backrest height	22.8 cm / 8.98 inches
Footrest to seat distance	22.5~33.5cm/8.86~13.19inches
Leg to seat surface angle	128°
Armrest to seat distance (max)	23 cm / 9 inches
Maximum Allowable Incline *2	6°
Brake	Electronic, regenerative and electromechanical

CLASSIFICATION

1. Type 'B' indoor / with some outdoor capabilities (EN12184:2014) Class 2 (Highway Regulations 1988).
2. Maximum safe Incline angle: 6 degrees (See Warning message below).
3. Due to manufacturing tolerances and continued product improvement, this specification can be subject to variance of (+ or -) 3%.
4. Tested in accordance with ISO 7176-4 standards. Results derived from theoretical calculation based on battery specifications and drive system performance. Test conducted at maximum weight capacity.
5. Varies with user weight, terrain type, battery amp-hour rating (Ah), battery charge, battery condition, tire type and tire condition. This specification can be subject to a variance of +10%, -5%.

XII. TECHNICAL SPECIFICATION

Warning!

- **The safe climbing angle is measured with the seat in the highest position, and a weight capacity of 320 lbs (145.45 kg). The motor on your wheelchair is powerful and may be able to climb a steeper incline than the maximum safe climbing angle. Exceeding the safe climbing angle may put you at risk of injury. On no account must you attempt to climb an incline of more than 6 degrees. This will exceed the rear stability of your wheelchair.**

Maximum speed:
up to 4 mph (6 km/h) [+/-10%] dependent on weight and manufacturing tolerances.

Range:
FR-W04 travel up to 12 km/ 7.5miles(10.5Ah); 18.9 km/ 11.8miles(16.5Ah)
when loaded 320 lbs (145.45 kg) .

Note: *Range varies with weight, terrain, temperature, battery condition etc. and is subject to manufacturing tolerances. Your battery will require a period of "breaking in" before they will reach their optimum capacity (up to 20 charge, discharge cycles can be expected) before full range is experienced. Refer to the battery charging section of this manual.*

Tyre Size:
Front 7 inch, Rear 8 inch. PU solid

Solid Batteries:
Li-Ion battery 10.5/AH or 16.5/AH, complies with UN38.3

Charger:
AC input.100-240 volt, 50/60Hz, DC output 24 volt. 5 Amp for li-ion battery

Battery Conforms to:
EN60335-2-29 and EN12184 EN12184:2014
EN55022:2010, Class B
EN60601-1-2:2007/ CISPR 11: 2009+A1: 2010
IEC61000-4-2/ IEC61000-4-3
IEC60601-1/ AAMI/ANSI ES 60601-1:2005 FCC Part 15:2010, Subpart B, Class B
ISO 7176 standard series

Electrical System:
24 volt DC

Drive system:
Rear wheel, direct drive via sealed drive axle.

XII. TECHNICAL SPECIFICATION

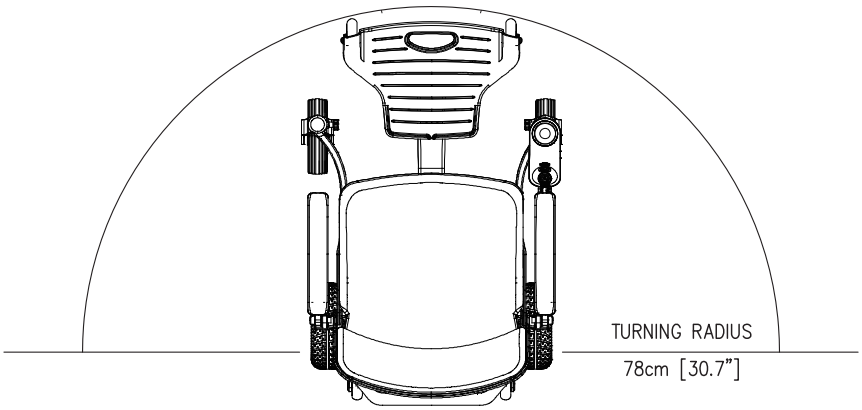

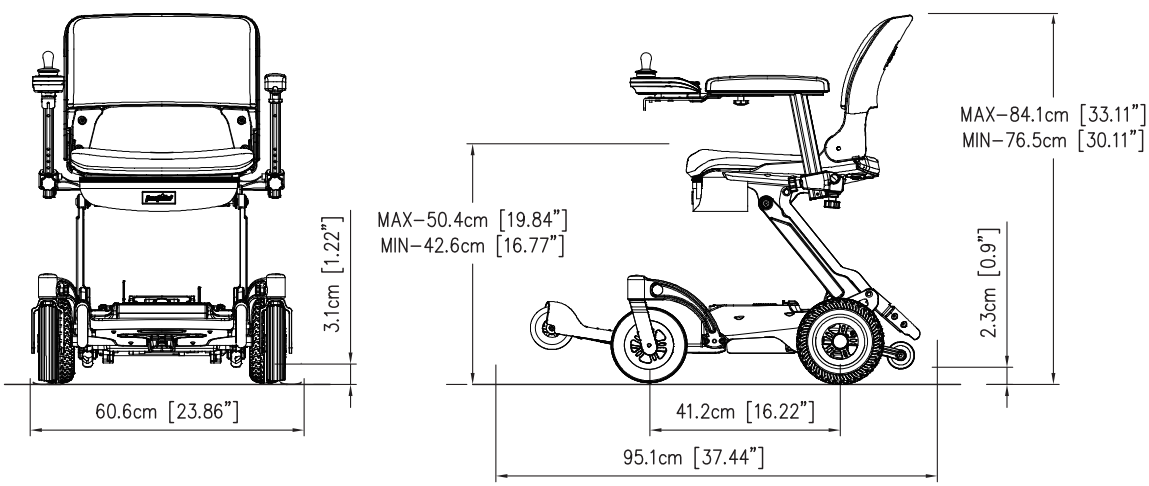

XII. TECHNICAL SPECIFICATION

Warning!

- **Radio wave sources may affect wheelchair control. Your powered wheelchair is designed to operate in appropriate environments; however, radio wave sources such as radio or TV broadcasting stations, amateur radio transmitters, two-way radios and cellular portable telephones can affect powered motorized wheelchairs. The following warnings listed below should reduce the chance of unintended brake release or uncontrolled powered wheelchair movement.**

- Refrain from using your cell phone, two way radio while driving your wheelchair.
- Be aware of nearby transmitters such as radio or TV stations, and try to avoid coming into close contact with them.
- If unintended movement or brake release should occur, power off your wheelchair as quickly as it is safe to do so.
- Be aware that adding accessories or components or modifying your wheelchair may make it more susceptible to interference from radio waves sources.
- Report all incidents of unintended movement or brake release to your authorized dealer, noting if there is a radio wave source nearby. Your authorized service technician will then be able to diagnose your wheelchair to eliminate any possible wheelchair component failure.

Your wheelchair has been tested to the following standards with reference to EN12184. Emissions EN55022(B), Immunity IEC61000-4-2,IEC61000-4-3,IEC 60601-1/ AAMI/ ANSI ES 60601-1.

EMI/RFI – This product has been tested and passed at an immunity level of 20 V/m.
NOTICE: For further information on EMI/RFI, contact your authorized provider. If unintended motion or brake release occurs, turn your wheelchair off as soon as it is safe to do so. Contact your authorized provider to report the incident.

Note: This manual is the latest specifications and product information, we reserve the right to necessary changes, any change in the product may cause a slight change in the illustration the latest version of the user manual is available on our website.

XIII. OPTIONAL ACCESSORIES

		
Home docking station	Seat bag	Travel bag

FR-W04 is a one piece foldable mobility wheelchair with optional accessories for your convenience. For information regarding these optional accessories listed above, please contact your authorized dealer.

Warning!

DO NOT over load accessories as this will affect the weight capacity of your wheelchair and decrease stability.

XIV. WARRANTY TERMS

Please keep a note of your serial number.
(This is located on the frame tube, under the chassis cover).



Your wheelchair is warranted for 12 months from the date of purchase against faults arising due to defects in manufacture or materials on electronic components.This warranty does not detract from, but is in addition to your legal rights. Parts replaced or repaired under the terms of this warranty will be covered for the balance of the period. This warranty applies only to parts supplied or approved by your authorized dealer. Refer to your warranty sheet for additional details. Due to the individual prescription nature of this product, this warranty is not transferable.

Note: Optional extended warranty insurance may be available from your authorized dealer.

EXCLUSIONS

This warranty does not extend to consumable items which may need replacing due to normal wear and tear, namely tyres, punctures, lubrication, mats, oil seals, gaskets, screws, upholstery, motor brushes ,fuses, batteries, handgrips etc. or to damage to the product caused by misuse, neglect or accident. This warranty does not apply if your wheelchair shows signs of excessive wear and abuse, or has been modified without the authority of your authorized dealer.

The following items are not covered by your warranty:

- Any noise or vibration, which does not affect the quality and function of the wheelchair.
- Damage due to lack of maintenance or improper use or operation or storage.
- Fees for the regular service inspection and maintenance.
- Any fees incurred as a result of warranty repair, losses or compensation because of the inability to use the wheelchair (telephone use, shipping, car rental, travel fees etc.).

METAL WORK

Components, such as the frame work and bright metal parts require special attention and may deteriorate in certain conditions. Moisture and salt may corrode parts if left unattended. Auto cleaner polishes should be used to prevent long term damage. Failure to clean and protect these components may void your warranty.

XIV. WARRANTY TERMS

PAINT WORK

This warranty does not cover deterioration of paint resulting from the lapse of time i.e. natural fading. It is the user's responsibility to clean and protect the painted surfaces.

SPEED CONTROLLER

Servicing of the speed controller or battery charger must only be carried out by your local authorized dealer. Any attempt to open or dismantle these items render the warranty void on that item immediately.

BATTERY

Batteries carry a limited 12 month warranty from the original manufacturer which is subject to a stringent wear and tear clause. Any battery faults due to a defect in the original manufacture will normally become obvious within the first two months of use. (See battery charging section of this manual for additional details.) Any gradual deterioration in the performance after this period is normal and associated with fair wear and tear, misuse or accidental damage and as such is not covered by the manufacturer's warranty. (Battery is warranted as a single part, only the failed part is replaceable.)



Warning!



DO NOT attempt to open the battery. Breaking the battery seal will void the warranty on the battery.

SERVICE CHECKS

In line with all mobility vehicles, your wheelchair will benefit from regular service inspections to keep it in pristine condition. The frequency of these service inspections will depend on the amount of use of your vehicle. We strongly recommend you contact your local authorized dealer to arrange for a service visit. (See Care & Maintenance Section of this manual). It is recommended that you fully service your wheelchair at least every 12 months or more frequently depending on use. The warranty on your wheelchair may not apply if routine maintenance is not carried out as defined in the Care and Maintenance section of the manual.

SERVICE CHECKS AND WARRANTY SERVICE

If your wheelchair should need attention due to failure as defined under the warranty terms, please contact the dealer from whom you purchased your wheelchair. The wheelchair shown and described in this manual may not be exactly identical in every detail as your own wheelchair. However, all instructions are still entirely relevant, irrespective of detail differences. If you are unsure of any details mentioned in this manual, please consult your authorized dealer before driving your wheelchair. Warranty service checks must be performed by an authorized dealer and will generally be valid at the location where purchased. All transportation costs and shipping damage incurred while submitting parts for repair or replacement are the responsibility of the purchaser.

XV. SERVICE RECORD

This section is designed to assist you in keeping records of any service and repairs done to your wheelchair. Should you decide to sell or exchange your wheelchair in the future, this will prove most helpful to you. Your service agent will also benefit from a documented record. This manual should accompany the wheelchair when service or repair work is carried out. The service agent will complete this section and return the manual to you.

DETAILS OF WORK CARRIED OUT	DEALER STAMP
	DATE INITIALS

DETAILS OF WORK CARRIED OUT	DEALER STAMP
	DATE INITIALS

DETAILS OF WORK CARRIED OUT	DEALER STAMP
	DATE INITIALS

DETAILS OF WORK CARRIED OUT	DEALER STAMP
	DATE INITIALS

XV. SERVICE RECORD

DETAILS OF WORK CARRIED OUT	DEALER STAMP
	DATE INITIALS

DETAILS OF WORK CARRIED OUT	DEALER STAMP
	DATE INITIALS

DETAILS OF WORK CARRIED OUT	DEALER STAMP
	DATE INITIALS

DETAILS OF WORK CARRIED OUT	DEALER STAMP
	DATE INITIALS

YOUR LOCAL DEALER

TO BE FILLED IN BY LOCAL DEALER

Headquarter and Kaohsiung Facility:

No.22, Bengong 5th Rd., Gangshan Dist., Kaoshiung City 820, Taiwan(R.O.C.)

TEL: 886-7-6223093 FAX: 886-7-6230373

EMAIL: sales@freerider.com.tw

www.freerider.com.tw

www.luggie.com.tw

2021.2 V2

PL90-2200