⚠ Before using your TOPRO Troja 5G

- **Intended use**: The TOPRO Troja 5G will give support to users with reduced balance and/or reduced walking ability. It is designed to be pushed, not pulled. The integrated seat provides an opportunity for the user to rest if needed. The basket is designed for carrying items weighing up to a total of 10 kg. The intended user is an adult. Height and weight restrictions apply, see table on page 19.
  Contraindications: The product is not suitable for persons with low strength in arms, with very poor balance, or with considerable cognitive disabilities. The product is designed and approved for both indoor and outdoor use. Outdoors the rollator is intended to be an aid for walking on roads and paths. It is not suitable in rough and/or steep terrain or steep inclinations, for example stairs. Do not use the rollator on slippery or icy surfaces.
- Take care not to get your fingers trapped when folding or unfolding your rollator.
- Do not put your fingers in open holes or between stationary parts.
- Before each use, check that your brakes are functioning correctly. Also check that your rollator locks into its unfolded position (you should hear a “click”) and the handles have been fastened properly.
- Always use both brake handles at the same time. This applies both to the driving brake and the parking brake. Before sitting down on the seat, make sure both parking brakes have been applied.
- The TOPRO Troja 5G should never be pushed while the parking brakes are on, or while the driving brakes are continuously applied.
- TOPRO Troja 5G has a maximum user weight of 150 kg (M) / 125 kg (S). It must not be used for the transportation of heavy goods or persons.
- For your own safety: Do not bend backwards or over to the sides when you are sitting on the seat. Do not tilt the rollator more than max 5°o sideways to avoid risk of falling. For the same reason bags etc. must never be hung on the handlebars.
- Make children aware that the TOPRO Troja 5G rollator is not a toy.
- If the rollator is exposed to extreme temperatures, some parts may feel very cold or very hot. Keep the rollator away from fire and hot items.
- Do not wear very long or wide, flowing garments as they may get caught in the wheels of the rollator and be a potential hazard.
- For safety reasons it is prohibited to sit on the rollator during public transportation. Stow your rollator securely. Use the parking brake.
- Do not use the rollator on stairs. Be careful when descending kerbs.
- Be aware that the rollator may roll faster than you walking downhill, which may put you at risk of falling.
- Training by a skilled person is advised, to get to know the device and learn how to use it correctly.
- Do not alter the product as this might put your safety at risk and the guarantee will not be valid.

After reading the notes above you may be wondering how to use your new TOPRO Troja 5G in a safe, ergonomic and comfortable way.

In order to ensure that the TOPRO Troja 5G is a good and safe aid for you, it is important that you keep the rollator close to your body. This is the best way to ensure good support while you are walking, and it will make it easier to get back up if you should have the misfortune of falling. Walking upright while looking steadily forward will help you keep your balance.

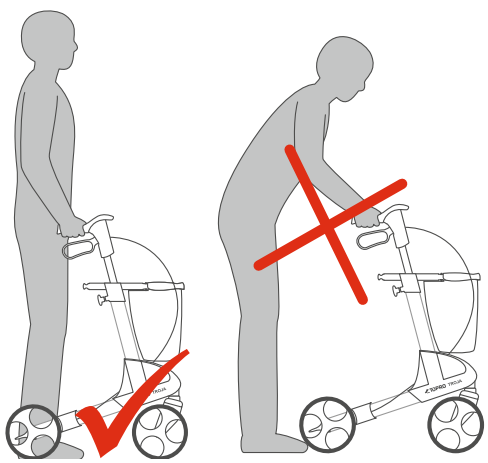

It is important that the height of handles are adjusted to best suit you. Please read point C on page 15 carefully to learn about handle adjustment. If you experience problems adjusting your rollator handles, please contact your dealer or physical therapist.

Warranty

7 Years Warranty

TOPRO TROJA is guaranteed free of faults and defects for a period of 7 years. Our guarantee excludes damage caused by incorrect operation, accidents or through normal wear and tear (e.g. brake blocks, brake wires, wheels, seat, handgrips, basket and grips etc).

For repairs during the guarantee period, please contact your local mobility shop or dealer. The guarantee is void if unauthorised spare parts and accessories have been or are being used on the product.

Expected lifespan of the product

The expected life span of the product is estimated to be 10 years, provided that it is used in the correct manner according to this user manual and its safety and maintenance instructions.

Security and comfort

Where you find the symbols below, there is a special notice about the security or comfort of the product.

C Comfort

S Security

Symbols on the TOPRO Troja 5G



Maximum user weight



Maximum rollator width



Maximum rollator height

A separate label on the tube indicates the serial number (SN) and production year and month.

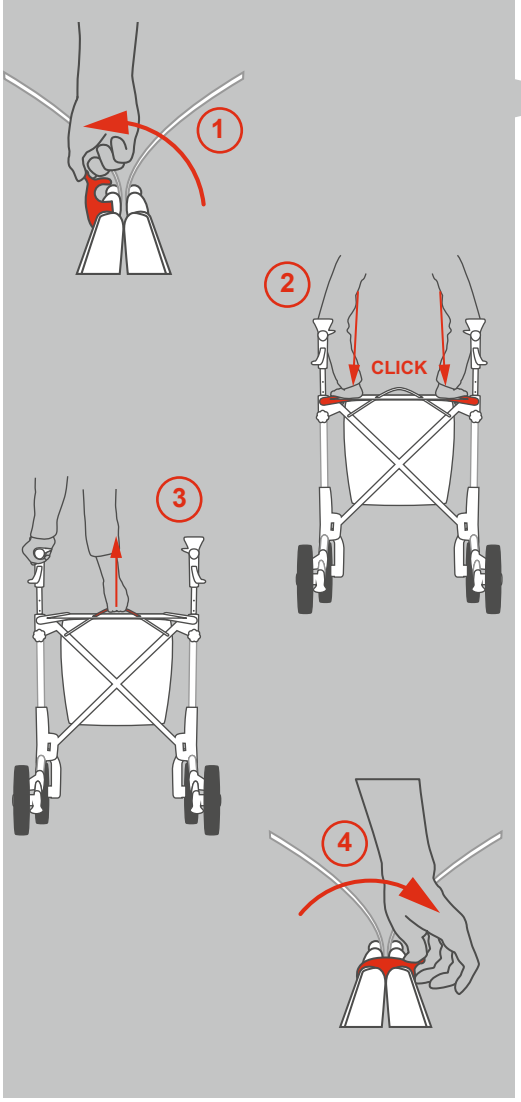

A. Folding and unfolding

Storage and travel

Unfolding

To unfold the TOPRO Troja 5G, release the lock clamp from the carrying handles (1) and push them down until you can hear them click into place (2).

Folding

When you want to fold your TOPRO Troja 5G, simply pull on the release strap on the seat (3). Then push the carrying handles together and lock them with the lock clamp (4). Make sure that the fabric of the front basket does not protrude too much between the carrying handles as this can block the fastening of the lock clamp.

Now your TOPRO Troja 5G is folded, still standing on all four wheels. It is now ready for transportation or storage. To reduce its size even further, it is possible to lower the handles (see on page 15, point C & D) and remove the wheels (see on page 16, point G).

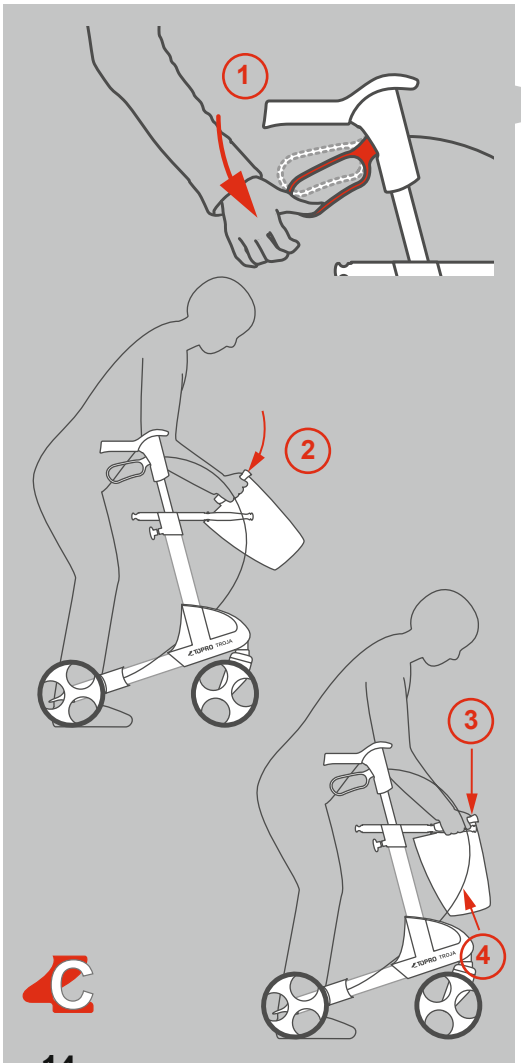

B. Shopping bag

Transportation and shopping

Shopping bag is enclosed. It holds up to 10 kilos and is easily attached and removed.

To mount the shopping bag, stand between the handles of your rollator and apply the parking brake (1). Then lift the shopping bag forwards in order to slide it underneath the seat (2), and onto the front and the carrying handles. When it is placed correctly, you will hear a click (3). Make sure that the brake wire still runs unrestrained along the frame (4).

To remove the shopping bag, stand between the handlebars and apply the parking brake. Place your hands towards the front of the basket, one on either side. Lift the shopping bag up while pressing it slightly together. This will release it. Always use both hands when performing this operation.

The shopping bag comes with a shoulder strap for you to carry it directly into your home. Make sure that the shoulder strap is tucked away when the shopping bag is fitted to the rollator, so that it does not become trapped in the front wheels.

The shopping bag can be washed gently at 40 °C.

C. Adjusting the height of the handles

Walking and standing ergonomically correct

As mentioned before, it is very important both for your safety and well-being that the height of the handles is correctly adjusted. To find the correct height, stand between the handles of the TOPRO Troja 5G and let your arms hang loosely down with your elbows slightly bent and your palms turned inwards. Your wrist now marks the correct adjustment height of the handles.

Your TOPRO Troja 5G will support you safely if your handle height is correctly adjusted and you walk closely to it, as previously shown.

To adjust the handle height, release the lock wheel by turning it a couple of times to the left (1), adjust the handlebar tubes to a suitable height (2) and pull them gently up and down until you hear a click. Then tighten the lock wheel again (3).

It is important to adjust both handles to the same height in order to maintain body symmetry and correct posture. Compare the number scale on each side.

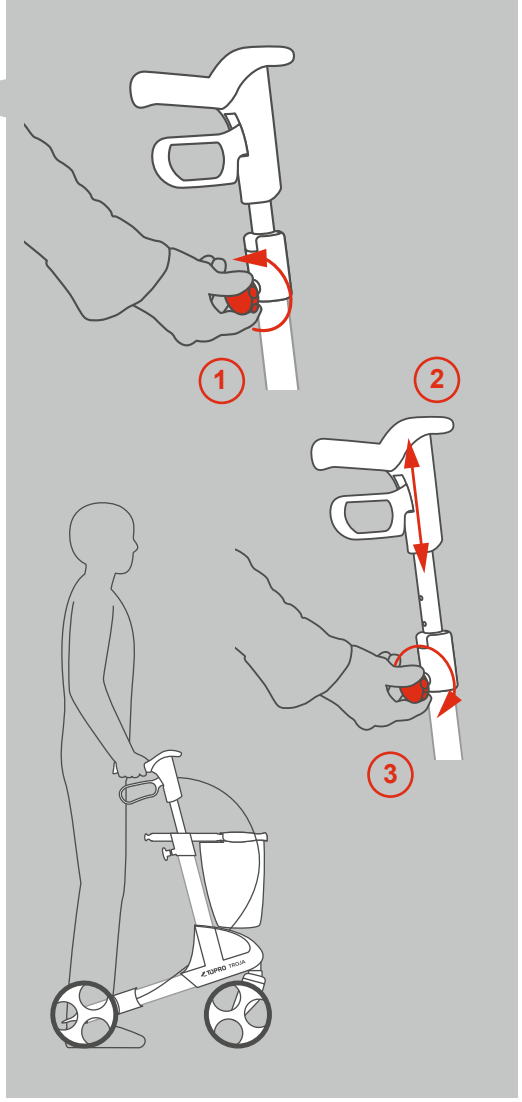

D. Height adjustment using the memory function

Always at the correct handle height

You have the opportunity to set the height of the handles at a standard setting, to suit your requirements for your height, so that you easily can find the same height again. This can be useful when the rollator is being transported or stored in as compact a manner as possible.

Decide on the height of the handlebars (see C, *Adjusting the height of the handles*). Count visible holes at the back of the handlebar tubes (see number scale). Unscrew the lock wheel (1). Pull the tube out of the frame (2). The
fastening piece will now follow the handlebar tube. Release the red memory button by turning it halfway round and pulling it out (3). Count down to the correct hole on the handlebar tube as previously determined and insert the memory button there. Then place the handlebar back into the frame (4) and tighten the lock wheel (5).

Now, to adjust the grip height, simply loosen the lock wheel (1) and pull up the handlebars as far as they go (2). Tighten the lock wheel (5). You have now set your optimal ergonomical grip height. Hereafter your handlebars will automatically stop at the correct height when you pull them up.

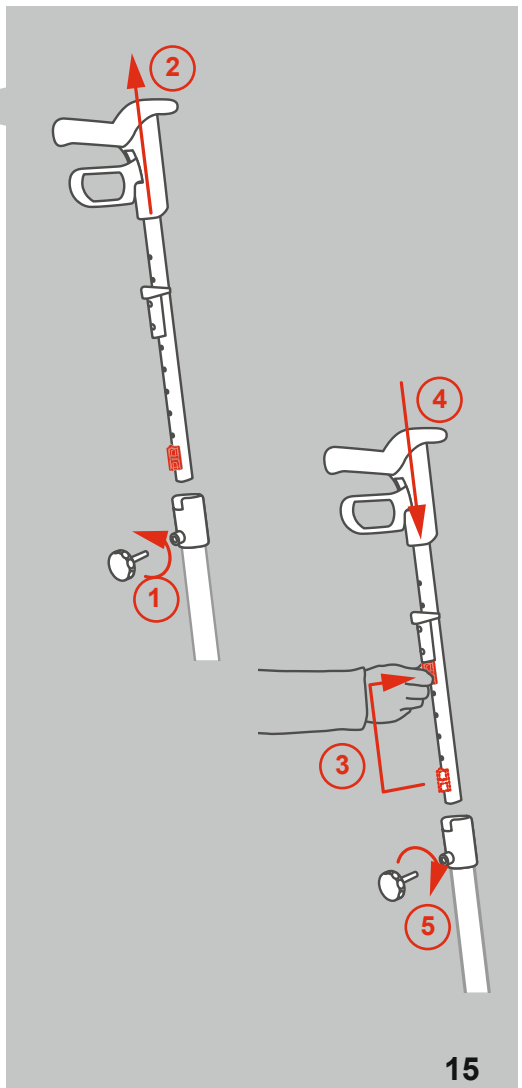

EN

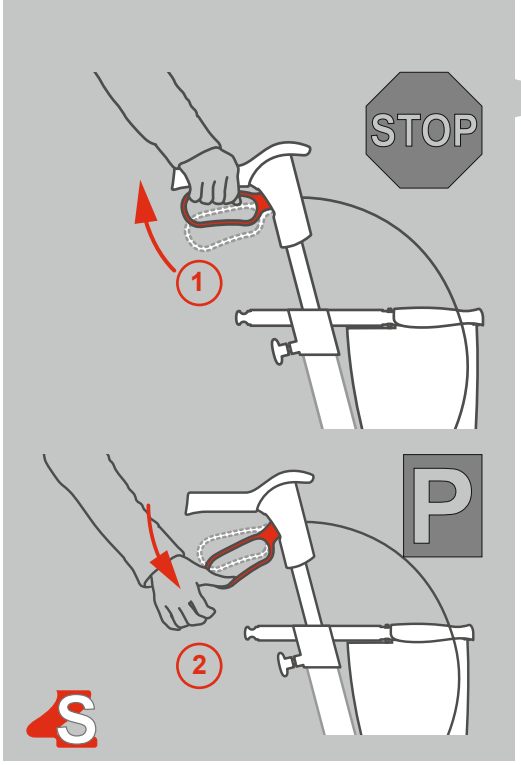

E. Brakes

Stopping and parking

The brake handle can be used in two different ways
- as a driving brake or as a parking brake.

Driving brake (1): The driving brake is used to reduce your speed when pushing the TOPRO Troja 5G. To apply the driving brake, simply pull the brake handles up. The brakes are applied instantly. Release the handles, and the TOPRO Troja 5G is once again ready to move forward. To prevent damaging the wheels, the brakes should not be applied continuously while walking.

⚠ Parking brake (2): The parking brake is used when TOPRO Troja 5G is parked for a short or long period, i.e. when you want to take a break from walking and sit on the seat. It is vital to apply the parking brake in this situation! To apply the parking brake, push the brake handles down towards the frame. To release, simply pull them back up.

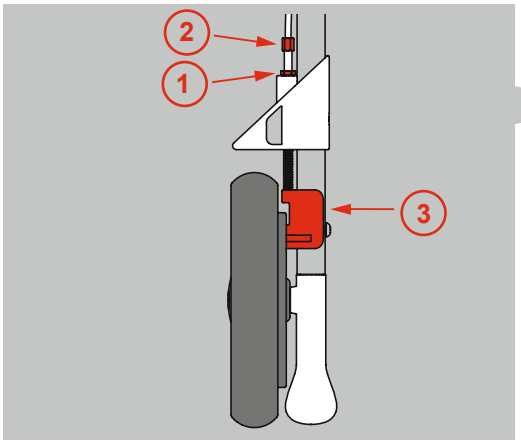

F. Adjusting / checking and maintaining the brakes

Loosen the nut (1). Tighten the brake wire with the adjustment screw (2). Adjust the brake block (3) as close as possible to the inner drum brake, and tighten the nut (1). Turn the wheel around to check that the brake block is not touching the wheel.

The brake blocks and springs should be cleaned regularly to guarantee their optimal operation. The wheels and brakes can be replaced if they are worn or damaged.

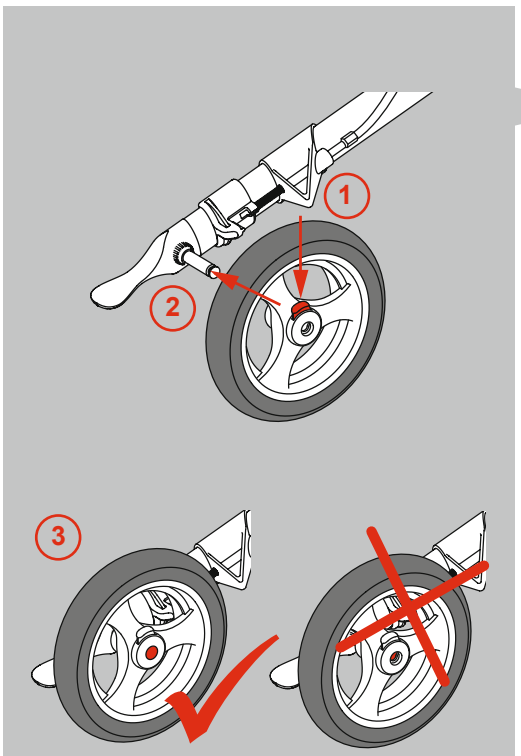

G. Replaceable wheels with TOPRO Quick Release

Suitable wheels for any surface

If you want to remove the wheels for transportation or replacement, follow these instructions:

Remove: Loosen the brake lever. Push down the red button on the hub (1) and slide the wheel off the axle (2) while still pushing the button down.

Attach: Loosen the brake lever. Slide the wheel unto the axle (2). Push the wheel as far as possible inward on the axle to make the wheel snap onto the axle. You will hear a “click” when the wheel is in place. The wheel is securely fastened when the axle is completely visible in the middle of the hub (3). Gently pull the wheel to check that it is securely fastened to the axle.

Please note that the front and rear wheels are different. The rear wheels have a ring for interior braking.

After the new wheel has been applied to the rollator, make sure that the brake lever is reattached and the brakes are functioning properly. Readjust them if necessary *(see section Adjusting / checking / maintaining the brakes)*.

In addition to the standard wheels there are also offroad wheels and studded tyres available as accessories. This is possible due to the fact that the rollator has got IBS (interior braking system) which brakes on the rim instead of the wheel surface.

H. TOPRO Ergo Grip

Comfortable support when rising, standing or walking

TOPRO Ergo Grip offers ergonomical grip and support surfaces. It combines an original hand grip position (1) with a hand grip at the front of the handle (2). This gives you a better gripping position when getting up from a chair or couch (3). Always make sure that the parking brake is locked in when you do this (4). The new hand grip also offers extra support while standing (5).

Several support options make it easy to vary your position when standing, thereby increasing your comfort and safety.

When pushing the rollator, your hands should always be kept in the original grip position (1) in order to make the best possible use of the brakes.

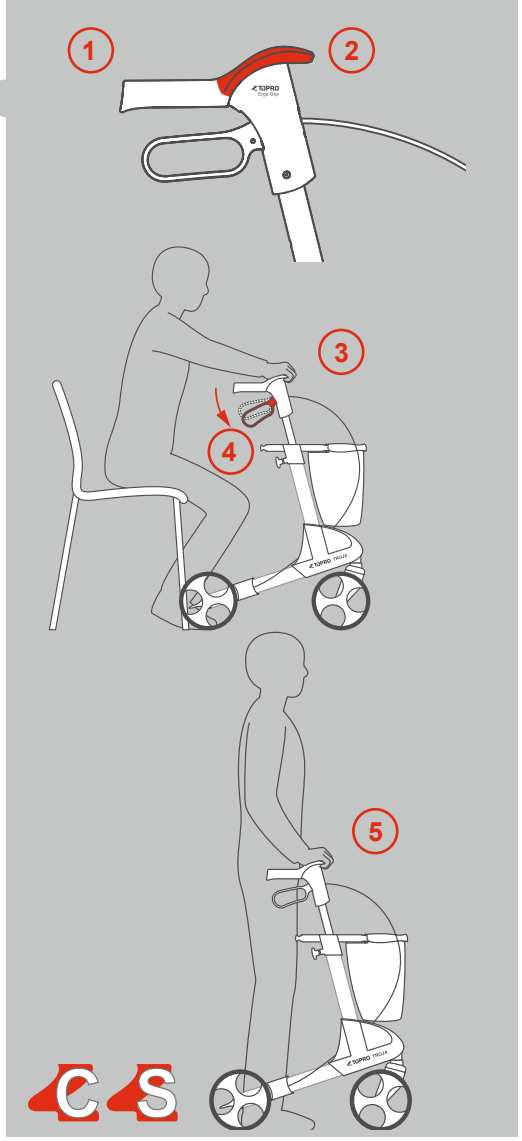

I. Seat

Sitting and relaxing

When you want to relax for a while, you can sit comfortably on the seat of TOPRO Troja 5G. Make sure to apply the parking brakes (1), to stop the rollator from moving! Always sit down with your back turned towards the shopping basket (2)!

A back support is available separately, to provide additional comfort when sitting on the rollator. For your own safety, do not bend backwards or lean over to the sides when sitting on the rollator (3).

The net seat, through which you have a view to the ground while walking, can easily be wiped with a cloth if needed.

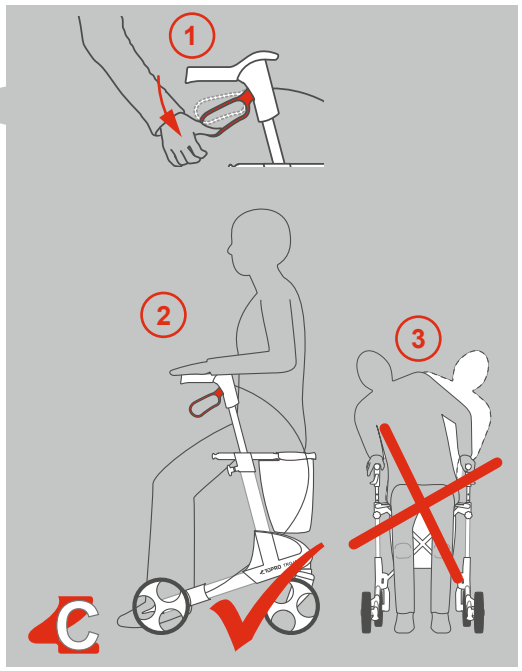

J. Edge guard

Safety while walking

The edge guard (1) on the rear wheel prevents the rollator from catching onto protruding edges, door frames etc. It allows you to manoeuvre safely past such obstacles.

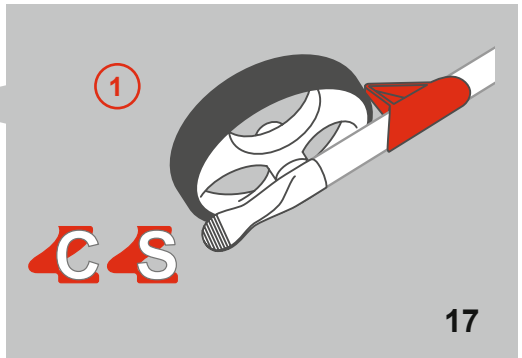

EN



K. Tilt function

Getting past obstacles

The wide tilt lever (1) helps you to navigate kerbs, thresholds and other minor obstacles. Simply place the front wheels towards the obstacle, place one foot on the tilt lever and press down (2). The TOPRO Troja 5G will then tilt up at the front and can be safely pushed across the obstacle.

⚠ Please note: Take care when descending kerbs. Do not use the rollator on stairs.

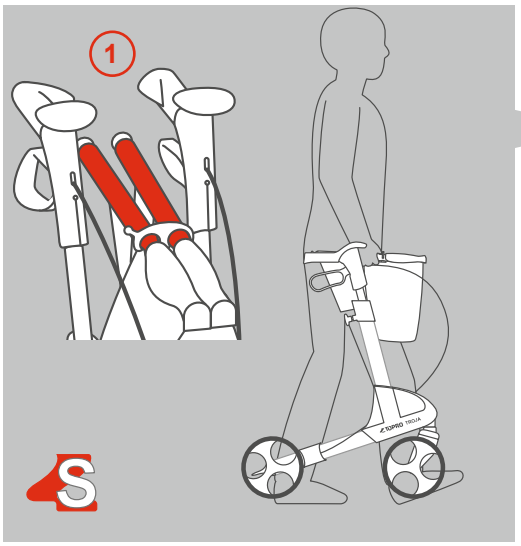

L. Carrying the rollator

Transportation and storage

If you wish to carry your TOPRO Troja 5G, please do so using the carrying handles (1).

This is the only grip you should use for this purpose. Carrying the rollator by the brake wires or seat strap may cause harm to the rollator or the user!

The carrying handles are also used to fasten the shopping basket.

Storage

Store the TOPRO Troja 5G indoors, in an upright position. It can also be stored outdoors, but it is recommended that it is placed in a sheltered position out of the weather. To help prevent any damage to your TOPRO Troja 5G we recommend that it is stored under cover and away from extremes of hot and cold temperatures.

Do not leave your rollator unattended. Do not put heavy items on top of the rollator during storage.

Transport

The rollator should be transported in the folded and locked position (see paragraph *Folding and unfolding*). Ensure that the lock clamp is on, so that the rollator cannot unfold unintentionally. Be careful when loading the rollator into a vehicle, giving attention to securing of the item.

If the rollator does not work properly

Make sure the rollator is unfolded correctly and that both brake handles are in appropriate position.

Technical data

TOPRO Troja 5G

Size	M (medium)	S (small)
Recommended user height	150–200 cm	135–170 cm
Max. user weight	150 kg	125 kg
Max. capacity shopping bag	10 kg / 15 l	10 kg / 15 l
Handle height	780–1000 mm	710–860 mm
Maximum height	1035 mm	895 mm
Maximum width	600 mm	600 mm
Maximum length	650 mm	650 mm
Distance between handles	470 mm	470 mm
Seat width	455 mm	455 mm
Seat height	635 mm	540 mm
Turning diameter	840 mm	840 mm
Diameter front/rear wheels	200 mm	200 mm
Width front/rear wheels	36 mm	36 mm
Handles	Ergonomic – several holding positions (TOPRO Ergo Grip)	
Grip distance driving brake	70 mm	70 mm
Dimensions when folded	l 650 × w 240 × h 815 mm	l 650 × w 240 × h 740 mm
Transport dimensions (without wheels and basket)	l 600 × w 240 × h 760 mm	l 600 × w 240 × h 720 mm
Transport weight (without wheels and basket)	5.6 kg	5.4 kg
Weight with basket and wheels	7.8 kg	7.6 kg

Inspection / Maintenance / Re-use

It is recommended that general inspection and maintenance is carried out and that the items below are checked on a regular basis, and at least once a year (frequency is determined by how often and how the rollator is used):

- Tubes, frame and screws
- Handlebars and handlebar tubes
- Brakes and brake handles, -blocks and -springs
- Wheels, seat and accessories

This also applies when the rollator is to be prepared for re-use. Please see detailed instructions in this user manual about maintenance of the brakes and the cleaning and disinfection of the rollator.

Cleaning

If your TOPRO Troja 5G has become dirty after use, simply wash or wipe it with normal household detergents. Do not use scrub detergents, steam or high-pressure cleaners.

Disinfection

Disinfection must only be carried out by authorized personnel and when wearing sufficient protective equipment.

The surface of the rollator must be cleaned with a disinfectant that contains 70–80% ethanol. We advise against disinfection that contains chlorine and phenol. *The manufacturer cannot be held responsible for any damage or wounds that might occur by the use of harmful disinfectant or disinfection carried out by unauthorized personnel.*

Material / Recycling



The rollator is made of plastic-coated aluminium pipes, plastic couplings and material made of plastic and polyester. Most parts can be recycled. Dispose of the rollator and its packaging in accordance with the applicable regulations in your country. For information, please contact your public authorities.

Accessories / News

TOPRO has designed a wide range of accessories following feedback from our satisfied customers. Function, design and quality are key words in these developments, and we aim to provide you with smart and innovative solutions for your everyday life with your new TOPRO Troja 5G.
You will find a selection of accessories described on the next pages and at your TOPRO dealer. For an updated overview and information about new products, please visit www.topromobility.com.

TOPRO Original accessories

Please visit **topromobility.com** for the complete list of available accessories for your TOPRO rollator.

EN



Drag brake (pair)
Continuous speed reduction can be adjusted to meet the user's requirements
Article no. 814038



Offroad Wheels
Good grip when walking on rougher paths etc. Set of four
Article no. 815302



Studded Tyres
Good grip when walking on icy roads etc. Set of two rear wheels (images show the old rim model)
Article no. 815331

Back support with padding
Ergonomically height adjustable according to your preferred seating position. Available in two different lengths.
Article nos.:
815270 (short, 67 cm)
815272 (long, 75 cm)



Tray
an easy way to carry cups and plates etc.
Easy to remove and clean

Article no. 814728

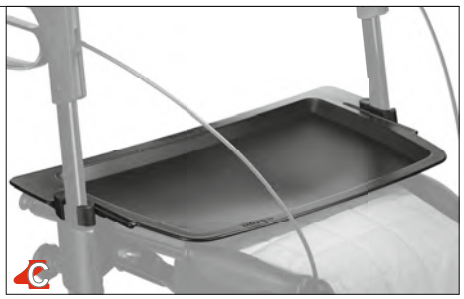

Anti slip mat
for tray

Article no. 814059

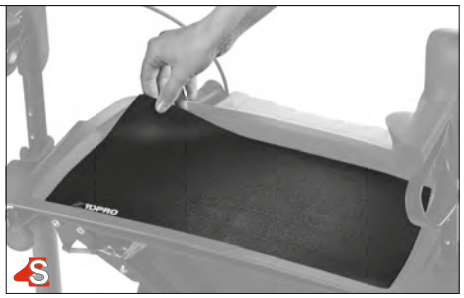

Crutch holder
can be fitted on either side

Article no. 814040



Bottle holder
so that you won't get thirsty
(Bottle not included)

Article no. 814043



Rollator lock
additional security for your TOPRO Troja 5G

Article no. 814023

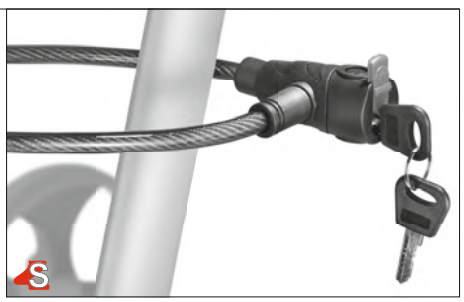

TOPRO Original accessories



LED lamp with clip-on and USB plug
Provides security in the dark

Article no. 815260



Rear bag with zipper
Keep your personal belongings such as your wallet and mobile phone in a practical bag close to you

Article no. 814046



Name tag
avoid mix ups and be sure you have your own TOPRO Troja 5G

Article no. 814024



One handed brake
Can be fitted on either side

Article no. 814026

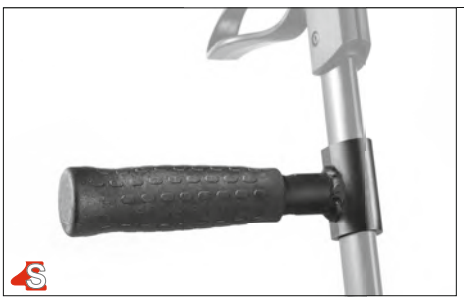

Guiding handle
e.g. for the visually impaired

Article no. 814014

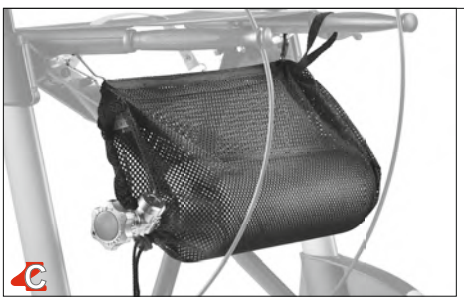

Oxygen basket
Suitable for bottles with 2 litres of oxygen (only compressed, not liquid)

Article no. 814009

Please visit **topromobility.com** for the complete list of available accessories for your TOPRO rollator.



Umbrella with attachment
Keep dry under the umbrella in rainy weather or use it as a parasol.
Article no. 814068



Transport bag
protects your rollator when travelling by e.g. airplane, train or car
Article no. 814042



Ice spurs for shoes
Size M (ca. 36–40)
Size L (ca. 41–46)
Article no. 814029 (Size M)
Article no. 814035 (Size L)

EN